JUL 27 1998
13

INCH-POUND

MIL-PRF-21038/27E
8 July 1998
SUPERSEDING
MIL-T-21038/27D
17 October 1994

PERFORMANCE SPECIFICATION SHEET

TRANSFORMERS, PULSE, LOW POWER

This specification is approved for use by all Departments and Agencies of the Department of Defense.

The requirements for acquiring the products described herein shall consist of this specification and MIL-PRF-21038.

REQUIREMENTS:

Dimensions and configuration: See figure 1 and table 1.

Operating temperature: -55°C to +130°C.

Case: The case shall be nonmetallic (e.g., epoxy).

Weight: 5 grams, maximum.

Terminal strength: Method 211 of MIL-STD-202, test condition A, 2 pounds applied force.

Terminals: Solderable printed circuit type terminals, see figure 1.

Electrical characteristics:

Turns ratio: See table I.

Common mode rejection (CMR): In accordance with table 1 when tested as specified on figure 2.

Pulse width of output: 2 microseconds nominal. The transformers shall be tested as specified on figure 3.

Overshoot and ringing: ±1 volt maximum. The transformers shall be tested as specified on figure 3 with the resulting waveform shown on figure 4.

Droop: In accordance with table I when tested as specified on figure 3 with the resulting waveform shown on figure 4.

DISTRIBUTION STATEMENT A. Approved for public release; distribution is unlimited.

USA Information Systems, Inc.
(757)491-7525 / (800)872-8830
www.usainfo.com

Rise time and fall time of output pulse: Shall be less than 150 nanoseconds except dash numbers -25, -26, -27, -30, and -31 shall be less than 250 nanoseconds maximum and dash numbers -9, -10, -15, -20, -24 shall be less than 200 nanoseconds maximum. The transformers shall be tested as specified on figure 3 with the resulting output waveform shown on figure 4.

Input impedance: The input impedance shall be as specified in table I when tested as specified on figure 5 at the frequencies of 75 kHz and at 1 MHz at -55°C ±2°C; +25°C ±2°C; and +130°C ±2°C.

DC resistance: The maximum dc resistance shall be in accordance with table I.

Dielectric withstanding voltage: Method 301 of MIL-STD-202, 100 V rms.

Insulation resistance: Method 302 of MIL-STD-202, test condition B. Not less than 1,000 megohms at 250 V dc.

Shock (specified pulse): Method 213 of MIL-STD-202, test condition I.

Vibration, high frequency: Method 204 of MIL-STD-202, test condition B.

Part or Identifying Number (PIN): Three levels of product are available in accordance with MIL-PRF-21038, level C, level M, and level T. The PIN shall be coded as follows:

M21038/27-(dash no from table I) C	denotes C level part (e.g., M21038/27-01C)
M21038/27-(dash no. from table I)	denotes M level part (e.g., M21038/27-01)
M21038/27-(dash no. from table I)T	denotes T level part (e.g., M21038/27-01T)

Extension of qualification: Extension of qualification shall be in accordance with MIL-PRF-21038. Manufacturers may submit additional proposals for extension of qualification for review and approval by the qualifying activity. One way to obtain family approval of products in this specification is outlined below:

Qualify M21038/27-02	extends qualification to M21038/27-01 to -31.
Qualify M21038/27-12	extends qualification to M21038/27-11 to -20, and -27 and -31.

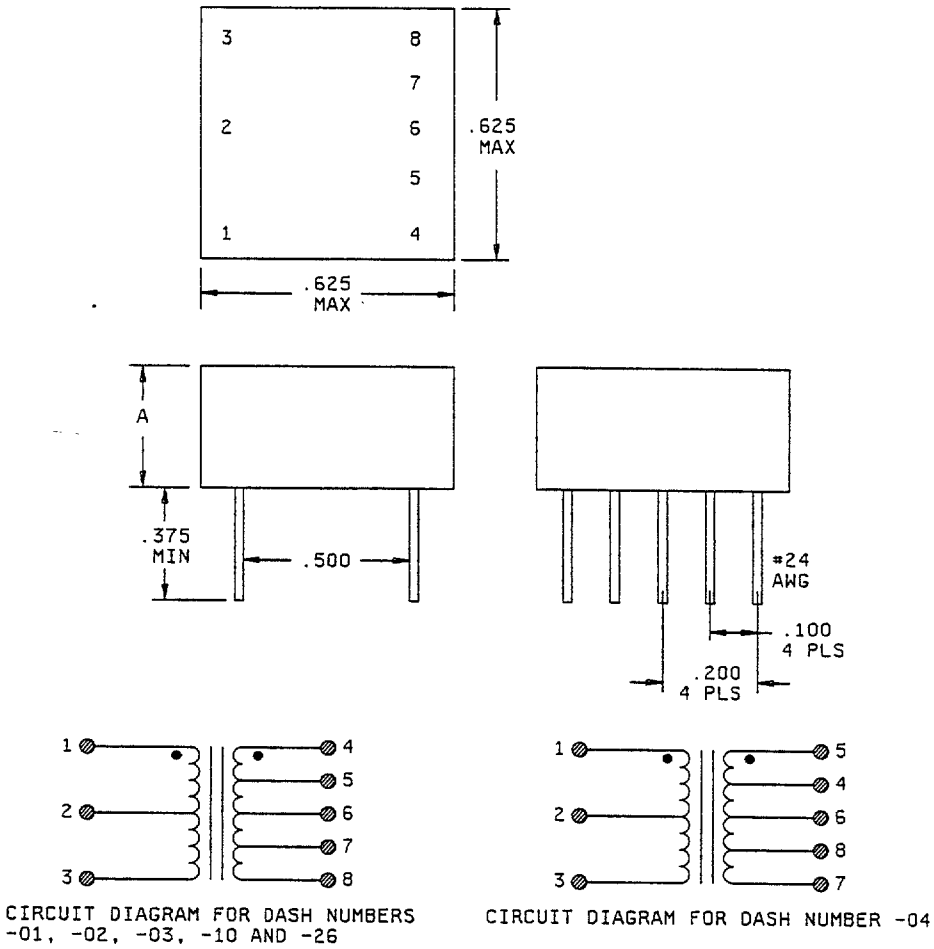

CONFIGURATION A

Dash no.	A max
-01, -04	.300
-02,-03,-10, -26	.250

FIGURE 1. Dimensions, configurations, and circuit diagrams.

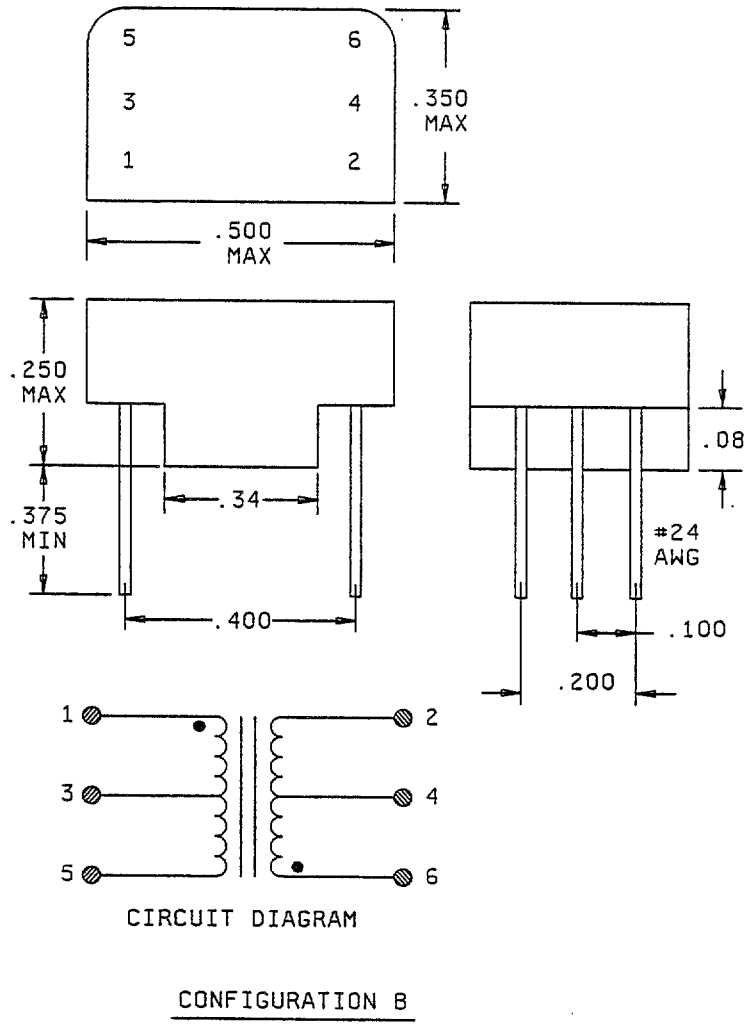

CONFIGURATION B

FIGURE 1. Dimensions, configurations, and circuit diagrams - Continued.

USA Information Systems, Inc.
(757)491-7525 / (800)872-8830
www.usainfo.com

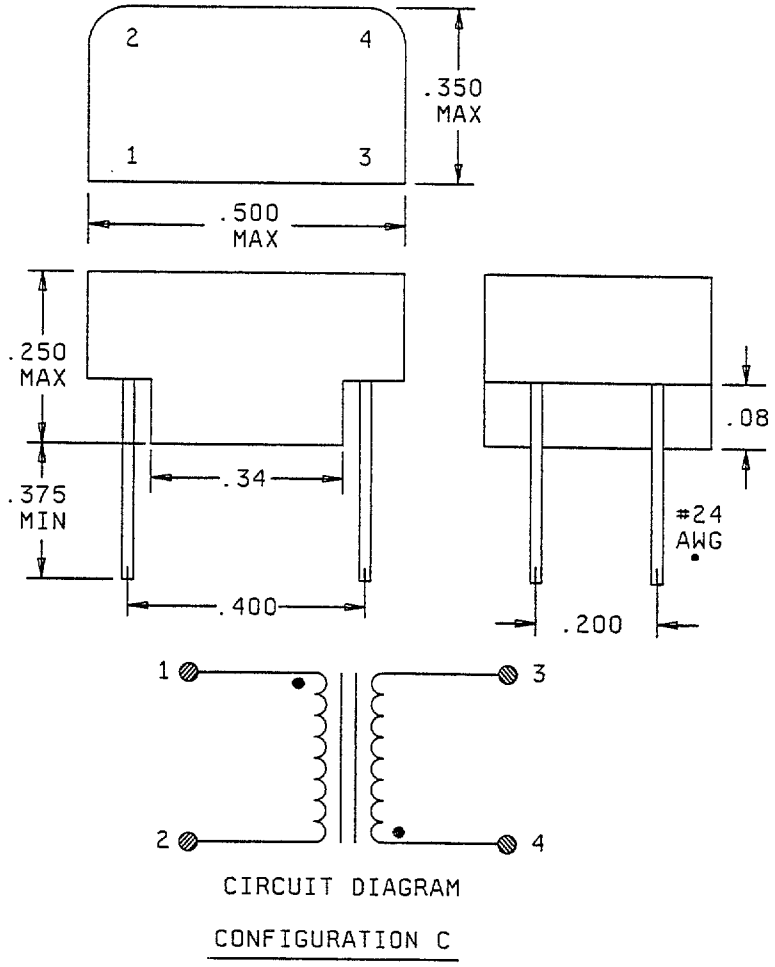

FIGURE 1. Dimensions, configurations, and circuit diagrams - Continued.

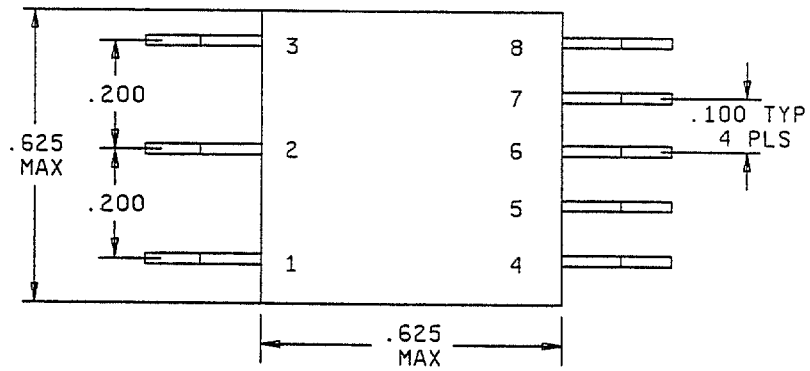

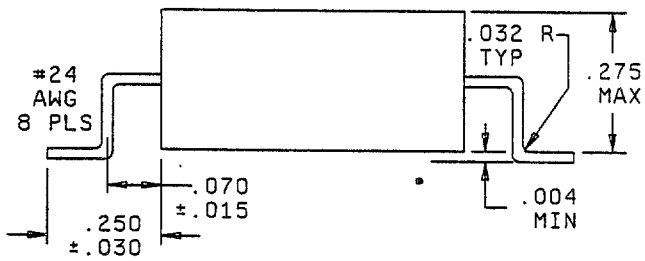

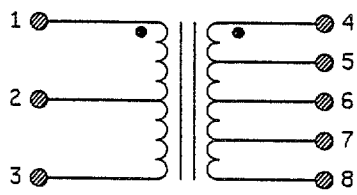

CIRCUIT DIAGRAM FOR DASH NUMBERS -11, -12, -13, -15 AND -27

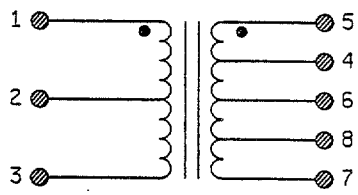

CIRCUIT DIAGRAM FOR DASH NUMBER -14

CONFIGURATION D

FIGURE 1. Dimensions, configurations, and circuit diagrams - Continued.

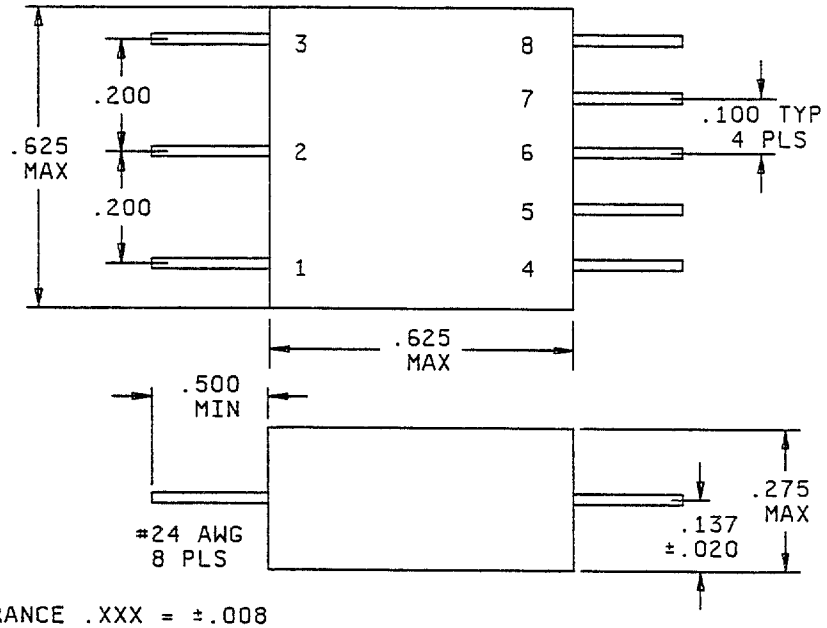

TOLERANCE .XXX = ±.008

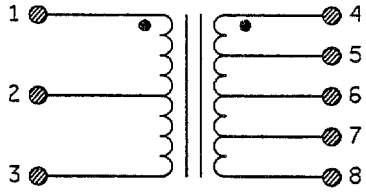

CIRCUIT DIAGRAM FOR DASH NUMBERS -16, -17, -18, -20 AND -31

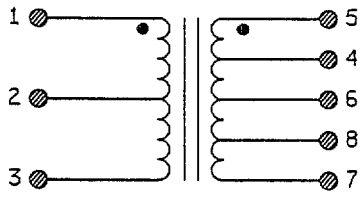

CIRCUIT DIAGRAM FOR DASH NUMBER -19

CONFIGURATION E

FIGURE 1. Dimensions, configurations, and circuit diagrams - Continued.

USA Information Systems, Inc.
(757)491-7525 / (800)872-8830
www.usainfo.com

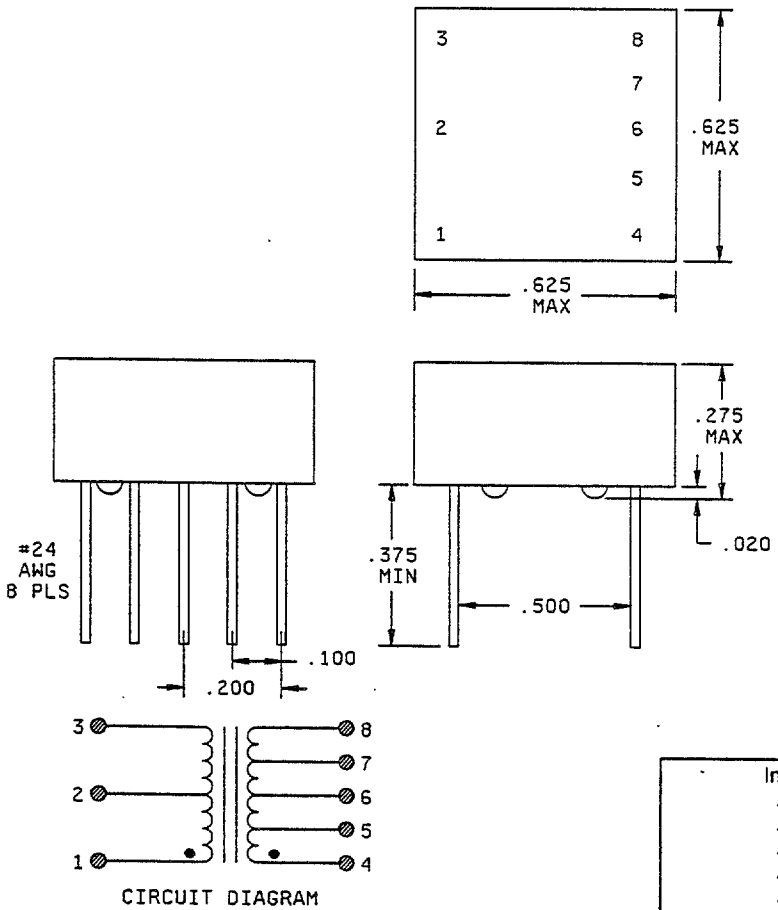

CONFIGURATION F

Inches	mm	Inches	mm
.004	0.10	.200	5.08
.008	0.20	.250	6.35
.015	0.38	.275	6.98
.020	0.51	.34	8.6
.030	0.76	.350	8.89
.032	0.81	.375	9.52
.070	1.78	.400	10.16
.08	2.0	.500	12.70
.100	2.54	.625	15.88
.137	3.48		

NOTES:
1. Dimensions are in inches.
2. Metric equivalents are given for general information only.
3. Unless otherwise specified, tolerance is ±.010 inch (0.25 mm).
4. Marking shall be on top of the case, unless space is insufficient then marking can appear on the sides.
5. Terminal identification shall be marked on the transformer as shown.
6. Standoff location is for reference only.

FIGURE 1. Dimensions, configurations, and circuit diagrams - Continued.

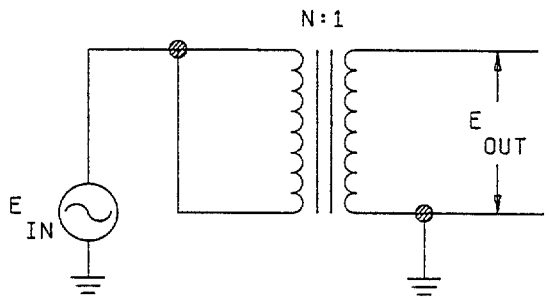

E_{IN} = 10V rms AT 1 MHz

CALC: $CMR = 20 \text{ LOG } \frac{E_{IN}}{E_{OUT}}$ (SEE NOTE)

FIGURE 2. Test circuit for common mode rejection.

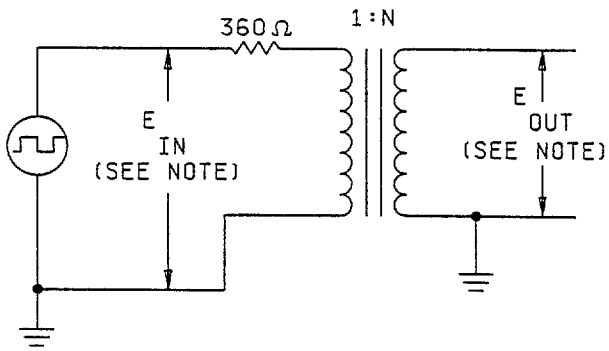

E_{IN} = 250 kHz SQUARE WAVE, 27.0 VOLTS PEAK-TO-PEAK WITH A RISE TIME OF 90ns ±5ns.

CALC: $DROOP = \frac{E_D}{E_{OUT}} \times 100\%$. (SEE FIGURE 4 FOR E_D)

FIGURE 3. Test circuit for droop, rise time, pulse width, overshoot, and life test.

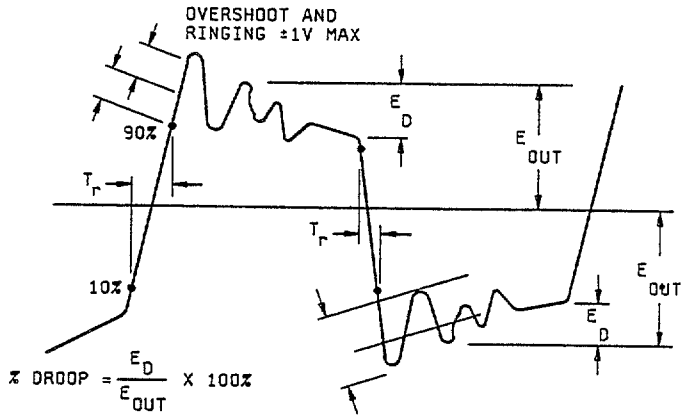

FIGURE 4. Output wave form for test circuit on figure 3.

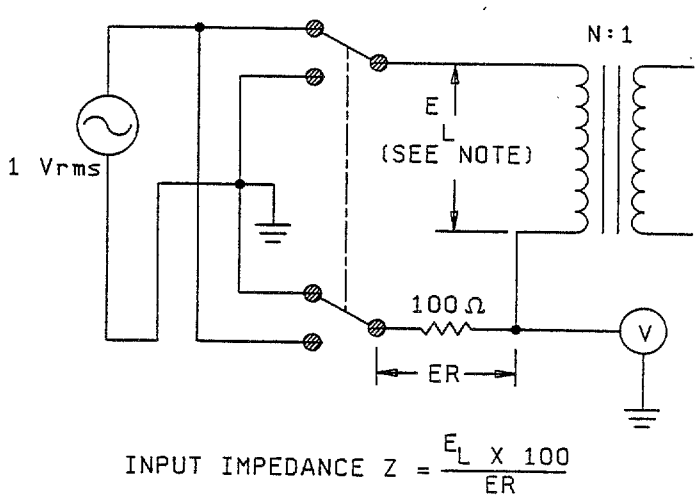

NOTE: Input to be applied to high-turn side of all dash numbers. Self impedance may also be measured using HP4277a LCZ meter or equivalent. N represents the highest turn winding.

FIGURE 5. Test circuit for input impedance.

TABLE I. Electrical characteristics and configurations.

Dash number	Turns ratio (±3%) 1/	Primary	Second-ary	Percent droop (max)	CMR (min)	DC resist-ance ohms (max)	Imped-ance ohms (min)	Config-uration
-01	1:1 1:.707	1-3 1-3	4-8 5-7	20	45 dB	1-3 3.0 4-8 3.0	(1-3) 4,000	A
-02	1.4:1 2:1	1-3 1-3	4-8 5-7	20	45 dB	1-3 3.5 4-8 3.0	(1-3) 7,200	A
-03	1.25:1 1.66:1	1-3 1-3	4-8 5-7	20	45 dB	1-3 3.2 4-8 3.0	(1-3) 4,000	A
-04	2.3:1 3.2:1	4-8 5-7	1-3 1-3	20	45 dB	1-3 1.2 4-8 3.0	(5-7) 3,000	A
-05	1:1.41	1-2	3-4	20	45 dB	1-2 2.2 3-4 2.7	(3-4) 3,000	C
-06	1:1	1-5	2-6	20	45 dB	1-5 2.5 2-6 2.8	(1-5) 3,000	B
-07	1:1.41	1-5	2-6	20	45 dB	1-5 2.2 2-6 2.7	(2-6) 3,000	B
-08	1:1.66	1-5	2-6	20	45 dB	1-5 1.5 2-6 2.4	(2-6) 3,000	B
-09	1:2	1-5	2-6	20	45 dB	1-5 1.3 2-6 2.6	(2-6) 3,000	B
-10	1:2.12 1:1.5	1-3 1-3	4-8 5-7	20	45 dB	1-3 1.0 4-8 3.5	(4-8) 4,000	A
-11	1:1 1:.707	1-3 1-3	4-8 5-7	20	45 dB	1-3 3.0 4-8 3.0	(1-3) 4,000	D
-12	1.4:1 2:1	1-3 1-3	4-8 5-7	20	45 dB	1-3 3.5 4-8 3.0	(1-3) 7,200	D

See footnote at end of table.

TABLE I. Electrical characteristics and configurations - Continued.

Dash number	Turns ratio (±3%) 1/	Primary	Second-ary	Percent droop (max)	CMR (min)	DC resist-ance ohms (max)	Imped-ance ohms (min)	Config-uration
-13	1.25:1 1.66:1	1-3 1-3	4-8 5-7	20	45 dB	1-3 3.2 4-8 3.0	(1-3) 4,000	D
-14	2.3:1 3.2:1	4-8 5-7	1-3 1-3	20	45 dB	1-3 1.2 4-8 3.0	(5-7) 3,000	D
-15	1:2.12 1:1.5	1-3 1-3	4-8 5-7	20	45 dB	1-3 1.0 4-8 3.5	(4-8) 4,000	D
-16	1:1 1:.707	1-3 1-3	4-8 5-7	20	45 dB	1-3 3.0 4-8 3.0	(1-3) 4,000	E
-17	1.4:1 2:1	1-3 1-3	4-8 5-7	20	45 dB	1-3 3.5 4-8 3.0	(1-3) 7,200	E
-18	1.25:1 1.66:1	1-3 1-3	4-8 5-7	20	45 dB	1-3 3.2 4-8 3.0	(1-3) 4,000	E
-19	2.3:1 3.2:1	4-8 5-7	1-3 1-3	20	45 dB	1-3 1.2 4-8 3.0	(5-7) 3,000	E
-20	1:2.12 1:1.5	1-3 1-3	4-8 5-7	20	45 dB	1-3 1.0 4-8 3.5	(4-8) 3,000	E
-21	1:1 1:.707	1-3 1-3	4-8 5-7	20	45 dB	1-3 3.0 4-8 3.0	(1-3) 4,000	F
-22	1.4:1 2:1	1-3 1-3	4-8 5-7	20	45 dB	1-3 3.5 4-8 3.0	(1-3) 7,200	F
-23	1.25:1 1.66:1	1-3 1-3	4-8 5-7	20	45 dB	1-3 3.2 4-8 3.0	(1-3) 4,000	F
-24	1:2.12 1:1.5	1-3 1-3	4-8 5-7	20	45 dB	1-3 1.0 4-8 3.5	(4-8) 4,000	F
-25	1:2.5 1:1.79	1-3 1-3	4-8 5-7	20	45 dB	1-3 1.0 4-8 3.5	(4-8) 4,000	F

See footnote at end of table.

USA Information Systems, Inc.
(757)491-7525 / (800)872-8830
www.usainfo.com

TABLE I. Electrical characteristics and configurations - Continued.

Dash number	Turns ratio (±3%) 1/	Primary	Second-ary	Percent droop (max)	CMR (min)	DC resist-ance ohms (max)	Imped-ance ohms (min)	Config-uration
-26	1:2.5 1:1.79	1-3 1-3	4-8 5-7	20	45 dB	1-3 1.0 4-8 3.5	(4-8) 4,000	A
-27	1:2.5 1:1.79	1-3 1-3	4-8 5-7	20	45 dB	1-3 1.0 4-8 3.5	(4-8) 4,000	D
-28	1:1.5	1-5	2-6	20	45 dB	1-5 .90 2-6 2.5	(2-6) 3,000	B
-29	1:1.79	1-5	2-6	20	45 dB	1-5 .90 2-6 2.5	(2-6) 3,000	B
-30	1:2.5	1-5	2-6	20	45 dB	1-5 1.0 2-6 2.8	(2-6) 3,000	B
-31	1:2.5 1:1.79	1-3 1-3	4-8 5-7	20	45 dB	1-3 1.0 4-8 3.5	(4-8) 4,000	E

1/ Primary, secondary on all parts except M21038/27-05, shall have center tap balance to ±5 percent.

Custodians:
Army - CR
Navy - EC
Air Force - 85
DLA - CC

Review activities:
Army - AM, CR4, MI
Navy - AS, MC, OS, SH
Air Force - 17, 19, 99

Preparing activity:
DLA - CC

(Project 5950-0907)

USA Information Systems, Inc.
(757)491-7525 / (800)872-8830
www.usainfo.com