JUN 03 1991
17

INCH-POUND

MIL-F-15733/34N
22 March 1991
SUPERSEDING
MIL-F-15733/34M
17 October 1986

MILITARY SPECIFICATION SHEET

FILTERS AND CAPACITORS, RADIO FREQUENCY INTERFERENCE, HERMETICALLY SEALED, STYLE FL90

Part or Identifying Numbers (PIN's) M15733/34-0008, -0022, -0032, -0033, and -0034 are inactive for new design as of 17 October 1986. PIN's M15733/34-0014, -0023, -0025, -0026, and -0027 are inactive for new design as of 15 January 1988. PIN's M15733/34-0010, -0015, -0019, and -0024 are inactive for new design after 22 March 1991. See table II for supersession data.

This specification is approved for use by all Departments and Agencies of the Department of Defense.

The requirements for acquiring the product described herein shall consist of this specification sheet and the issue of the following specification listed in that issue of the Department of Defense Index of Specifications and Standards (DODISS) specified in the solicitation: MIL-F-15733.

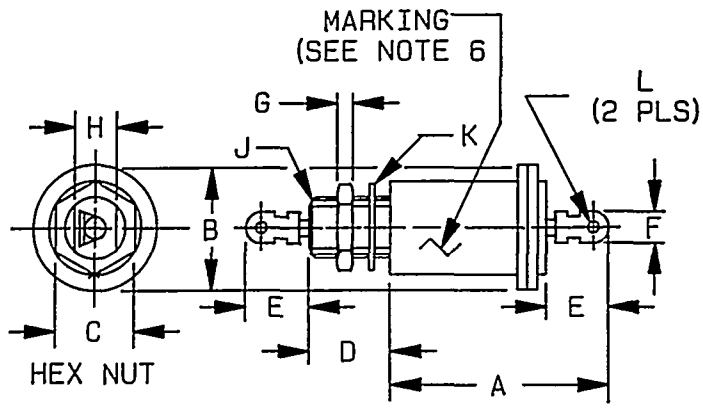

FOR DASH NUMBER 0001 AND 0002

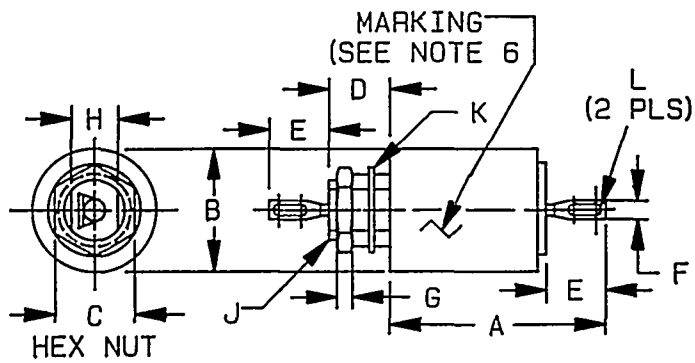

FIGURE 1. Case dimensions and circuits diagrams.

AMSC N/A
FSC 59GP

DISTRIBUTION STATEMENT A. Approved for public release; distribution is unlimited.

USA Information Systems, Inc.
(757)491-7525 / (800)872-8830
www.usainfo.com

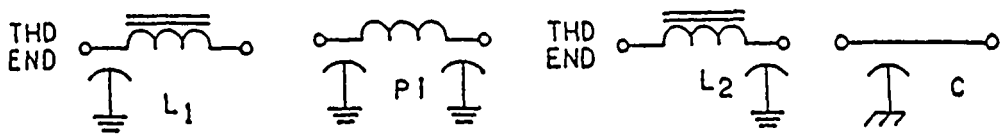

CIRCUIT DIAGRAMS

NOTES:

1. Dimensions are in inches.
2. Metric equivalents are in parentheses.
3. Metric equivalents are given for general information only.
4. Circuit diagram is for information only.
5. All filters shall be supplied with mounting hardware.
6. Terminal identification (nonsymmetrical filters): The case shall be marked at the threaded end of the filter, with the symbol "C" or the symbol "L", as follows:

Circuit	Symbol
L_1	C
L_2	L

7. Recommended mounting torque: 48 in-oz (.250-28 UNF-2A).
   60 in-oz (.3125-24 UNF-2A).
   96 in-oz (.216-32 UNF-2A).

FIGURE 1. Case dimensions and circuit diagrams - Continued.

Dash no.	Weight (grams)	A	B	C		D		E	
		Max	Max	Min	Max	Min	Max	Min	Max
0001	34	1.763 (44.78)	.702 (17.83)	.365 (9.27)	.385 (9.78)	.297 (7.54)	.327 (8.31)	.400 (10.16)	.483 (12.27)
0002	34	1.763 (44.78)	.702 (17.83)	.365 (9.27)	.385 (9.78)	.297 (7.54)	.327 (8.31)	.400 (10.16)	.483 (12.27)
0003	8.2	.730 (18.54)	.416 (10.57)	.302 (7.67)	.322 (8.18)	.177 (4.50)	.197 (5.00)	.100 (2.54)	.190 (4.83)
0004	22	1.195 (30.35)	.702 (17.83)	.365 (9.27)	.385 (9.78)	.297 (7.54)	.327 (8.31)	.198 (5.03)	.238 (6.05)
0005	22	1.195 (30.35)	.702 (17.83)	.365 (9.27)	.385 (9.78)	.297 (7.54)	.327 (8.31)	.198 (5.03)	.238 (6.05)
0006	22	1.195 (30.35)	.702 (17.83)	.365 (9.27)	.385 (9.78)	.297 (7.54)	.327 (8.31)	.198 (5.03)	.238 (6.05)
0007	8.2	.760 (19.30)	.385 (9.78)	.302 (7.67)	.322 (8.18)	.177 (4.50)	.197 (5.00)	.100 (2.54)	.190 (4.83)
0008	8.2	.760 (19.30)	.385 (9.78)	.302 (7.67)	.322 (8.18)	.177 (4.50)	.197 (5.00)	.100 (2.54)	.190 (4.83)
0009	22	1.170 (29.72)	.690 (17.53)	.365 (9.27)	.385 (9.78)	.297 (7.54)	.327 (8.31)	.198 (5.03)	.238 (6.05)
0010	9.0	.793 (20.14)	.416 (10.57)	.302 (7.67)	.322 (8.18)	.302 (7.67)	.322 (8.18)	.100 (2.54)	.190 (4.83)
0011	34	.890 (22.61)	.702 (17.83)	.365 (9.27)	.385 (9.78)	.302 (7.67)	.322 (8.18)	.199 (5.05)	.235 (5.97)
0012	34	.890 (22.61)	.702 (17.83)	.365 (9.27)	.385 (9.78)	.302 (7.67)	.322 (8.18)	.199 (5.05)	.235 (5.97)
0013	34	.890 (22.61)	.702 (17.83)	.365 (9.27)	.385 (9.78)	.302 (7.67)	.322 (8.18)	.199 (5.05)	.235 (5.97)
0014	8.5	.730 (18.54)	.416 (10.57)	.302 (7.67)	.322 (8.18)	.302 (7.67)	.322 (8.18)	---	.190 (4.83)
0015	8.5	.743 (18.87)	.416 (10.57)	.302 (7.67)	.322 (8.18)	.302 (7.67)	.322 (8.18)	---	.190 (4.83)
0016	34	.890 (22.61)	.416 (10.57)	.302 (7.67)	.322 (8.18)	.159 (4.04)	.221 (5.61)	.140 (3.56)	.160 (4.06)
0017	8.5	.743 (18.87)	.416 (10.57)	.302 (7.67)	.322 (8.18)	.159 (4.04)	.221 (5.61)	.140 (3.56)	.160 (4.06)
0018	8.5	.743 (18.87)	.416 (10.57)	.302 (7.67)	.322 (8.18)	.159 (4.04)	.221 (5.61)	.140 (3.56)	.160 (4.06)

FIGURE 1. Case dimensions and circuit diagrams - Continued.

Dash no.	F		G		H		J	K	L
	Min	Max	Min	Max	Min	Max	Mounting thread	Internal tooth lockwasher	Wire hole
0001	.146 (3.71)	.230 (5.84)	.090 (2.29)	.100 (2.54)	.235 (5.97)	.265 (6.73)	.3125-24 UNF-2A	.022 ±.010 thickness (0.56) (0.25)	.095 ±.015 dia (2.41) (0.38)
0002	.146 (3.71)	.230 (5.84)	.090 (2.29)	.100 (2.54)	.235 (5.97)	.265 (6.73)	.3125-24 UNF-2A	.022 ±.010 thickness (0.56) (0.25)	.095 ±.015 dia (2.41) (0.38)
0003	.083 (2.11)	.130 (3.30)	.088 (2.24)	.098 (2.49)	.190 (4.83)	.210 (5.33)	.250-28 UNF-2A	.025 ±.010 thickness (0.64) (0.25)	.050 ±.010 dia (1.27) (0.25) or .070 ±.010 dia (1.78) (0.25) or .050 ±.010 X (1.27) (0.25) .070 ±.010 (1.78) (0.25)
0004	.099 (2.51)	.140 (3.56)	.090 (2.29)	.100 (2.54)	.235 (5.97)	.265 (6.73)	.3125-24 UNF-2A	.022 ±.010 thickness (0.56) (0.25)	.062 ±.015 dia (1.57) (0.38) x .125 ±.015 (3.17) (0.38)
0005	.099 (2.51)	.140 (3.56)	.090 (2.29)	.100 (2.54)	.235 (5.97)	.265 (6.73)	.3125-24 UNF-2A	.022 ±.010 thickness (0.56) (0.25)	.062 ±.015 dia (1.57) (0.38) x .125 ±.015 (3.17) (0.38)
0006	.099 (2.51)	.140 (3.56)	.090 (2.29)	.100 (2.54)	.235 (5.97)	.265 (6.73)	.3125-24 UNF-2A	.022 ±.010 thickness (0.56) (0.25)	.062 ±.015 dia (1.57) (0.38) x .125 ±.015 (3.17) (0.38)
0007	.100 (2.54)	.130 (3.30)	.088 (2.24)	.098 (2.49)	.190 (4.83)	.210 (5.33)	.250-28 UNF-2A	.025 ±.010 thickness (0.64) (0.25)	.070 ±.020 dia (1.78) (0.51)
0008	.100 (2.54)	.130 (3.30)	.088 (2.24)	.098 (2.49)	.190 (4.83)	.210 (5.33)	.250-28 UNF-2A	.025 ±.010 thickness (0.64) (0.25)	.070 ±.020 dia (1.78) (0.51)
0009	.099 (2.51)	.140 (3.56)	.090 (2.29)	.100 (2.54)	.235 (5.97)	.265 (6.73)	.3125-24 UNF-2A	.022 ±.010 thickness (0.56) (0.25)	.060 ±.020 dia (1.52) (0.51) or .060 ±.015 (1.52) (0.38) x .125 ±.015) (3.17) (0.38)
0010	.100 (2.54)	.130 (3.30)	.090 (2.29)	.100 (2.54)	.190 (4.83)	.210 (5.33)	.250-28 UNF-2A	.025 ±.010 thickness (0.64) (0.25)	
0011	.099 (2.51)	.140 (3.56)	.090 (2.29)	.100 (2.54)	.235 (5.97)	.265 (6.73)	.3125-24 UNF-2A	.025 ±.010 thickness (0.64) (0.25)	.093 ±.020 dia (2.36) (0.51) or .062 ±.010 (1.57) (0.25) x .125 ±.010 (3.17) (0.25)
0012	.099 (2.51)	.140 (3.56)	.090 (2.29)	.100 (2.54)	.235 (5.97)	.265 (6.73)	.3125-24 UNF-2A	.025 ±.010 thickness (0.64) (0.25)	

FIGURE 1. Case dimensions and circuit diagrams - Continued.

Dash no.	F		G		H		J	K	L
	Min	Max	Min	Max	Min	Max	Mounting thread	Internal tooth lockwasher	Wire hole
0013	.099 (2.51)	.140 (3.56)	.090 (2.29)	.100 (2.54)	.235 (5.97)	.265 (6.73)	.3125-24 UNF-2A	.025 ±.010 thickness (0.64) (0.25)	.093 ±.020 dia (2.36) (0.51) or .062 ±.010 (1.57) (0.25) x .125 ±.010 (3.17) (0.25)
0014	.100 (2.54)	.130 (3.30)	---	.100 (2.54)	.190 (4.83)	.210 (5.33)	.250-28 UNF-2A	.025 ±.010 thickness (0.64) (0.25)	.060 ±.020 dia (1.52) (0.51) or .060 ±.015 (1.52) (0.38) x .125 ±.015 (3.17) (0.38)
0015	.099 (2.51)	.119 (3.02)	.088 (2.24)	.098 (2.49)	.190 (4.83)	.210 (5.33)	.250-28 UNF-2A	.022 ±.010 thickness (0.56) (0.25)	.062 ±.020 dia (1.57) (0.51) or .050 ±.010 x (1.27) (0.25) .070 ±.010 (1.78) (0.25)
0016	.100 (2.54)	.190 (4.83)	.088 (2.24)	.098 (2.49)	.169 (4.29)	.231 (5.87)	.250-28 UNF-2A	.022 ±.010 thickness (0.56) (0.25)	.062 ±.020 dia (1.57) (0.51) or .050 ±.010 x (1.27) (0.25) .070 ±.010 (1.78) (0.25)
0017	.100 (2.54)	.190 (4.83)	.088 (2.24)	.098 (2.49)	.169 (4.29)	.231 (5.87)	.250-28 UNF-2A	.022 ±.010 thickness (0.56) (0.25)	.062 ±.020 dia (1.57) (0.51) or .050 ±.010 x (1.27) (0.25) .070 ±.010 (1.78) (0.25)
0018	.100 (2.54)	.190 (4.83)	.088 (2.24)	.098 (2.49)	.169 (4.29)	.231 (5.87)	.250-28 UNF-2A	.022 ±.010 thickness (0.56) (0.25)	.062 ±.020 dia (1.57) (0.51) or .050 ±.010 x (1.27) (0.25) .070 ±.010 (1.78) (0.25)

FIGURE 1. Case dimensions and circuit diagrams - Continued.

Dash no.	Weight (grams)	A	B	C		D		E	
		Max	Max	Min	Max	Min	Max	Min	Max
0019	9.0	.793 (20.14)	.416 (10.57)	.302 (7.67)	.322 (8.18)	.297 (7.54)	.327 (8.31)	---	.190 (4.83)
0020	34	.900 (22.86)	.702 (17.83)	.365 (9.27)	.385 (9.78)	.297 (7.54)	.327 (8.31)	.198 (5.03)	.238 (6.05)
0021	34	.900 (22.86)	.702 (17.83)	.365 (9.27)	.385 (9.78)	.297 (7.54)	.327 (8.31)	.198 (5.03)	.238 (6.05)
0022	8	.760 (19.30)	.385 (9.78)	.302 (7.67)	.322 (8.18)	.182 (4.62)	.190 (4.83)	---	.190 (4.83)
0023	8	.760 (19.30)	.385 (9.78)	.302 (7.67)	.322 (8.18)	.182 (4.62)	.190 (4.83)	---	.190 (4.83)
0024	8	.760 (19.30)	.385 (9.78)	.302 (7.67)	.322 (8.18)	.182 (4.62)	.190 (4.83)	---	.190 (4.83)
0025	8	.760 (19.30)	.385 (9.78)	.302 (7.67)	.322 (8.18)	.182 (4.62)	.190 (4.83)	---	.190 (4.83)
0026	8	.760 (19.30)	.385 (9.78)	.302 (7.67)	.322 (8.18)	.182 (4.62)	.190 (4.83)	---	.190 (4.83)
0027	8	.760 (19.30)	.385 (9.78)	.302 (7.67)	.322 (8.18)	.182 (4.62)	.190 (4.83)	---	.190 (4.83)
0028	8	.760 (19.30)	.385 (9.78)	.302 (7.67)	.322 (8.18)	.182 (4.62)	.190 (4.83)	---	.190 (4.83)
0029	16	.900 (22.86)	.702 (17.83)	.365 (9.27)	.385 (9.78)	.297 (7.54)	.327 (8.31)	---	.238 (6.05)
0030	8	.900 (22.86)	.416 (10.57)	.302 (7.67)	.322 (8.18)	.159 (4.04)	.221 (5.61)	---	.190 (4.83)
0031	22	1.219 (30.96)	.702 (17.83)	.365 (9.27)	.385 (9.78)	.297 (7.54)	.327 (8.31)	---	.312 (7.92)
0032	9	.730 (18.54)	.416 (10.57)	.302 (7.67)	.322 (8.18)	.302 (7.67)	.322 (8.18)	---	.190 (4.83)
0033	9	.778 (19.76)	.416 (10.57)	.302 (7.67)	.322 (8.18)	.302 (7.67)	.322 (8.18)	---	.190 (4.83)
0034	9	.760 (19.30)	.385 (9.78)	.302 (7.67)	.322 (8.18)	.302 (7.67)	.322 (7.18)	---	.190 (4.83)
0035	7	.474 (12.04)	.410 (10.41)	.297 (7.54)	.327 (8.31)	.180 (4.57)	.200 (5.08)	---	.162 (4.11)
0036	8	.600 (15.24)	.385 (9.78)	.297 (7.54)	.327 (8.31)	.180 (4.57)	.200 (5.08)	---	.162 (4.11)
0037	9	.575 (14.61)	.690 (17.53)	.365 (9.27)	.385 (9.78)	.297 (7.54)	.327 (8.31)	.198 (5.03)	.238 (6.05)

FIGURE 1. Case dimensions and circuit diagrams - Continued.

Dash no.	F		G		H		J	K	L
	Min	Max	Min	Max	Min	Max	Mounting thread	Internal tooth lockwasher	Wire hole
0019	.100 (2.54)	.190 (4.83)	.090 (2.29)	.100 (2.54)	.196 (4.98)	.206 (5.23)	.250-28 UNF-2A	.022 ±.010 thickness (0.56) (0.25)	.060 ±.020 dia (1.52) (0.51) or .060 ±.015 x (1.52) (0.38) .125 ±.015 (3.18) (0.38)
0020	.099 (2.51)	.140 (3.56)	.090 (2.29)	.100 (2.54)	.235 (5.97)	.265 (6.73)	.3125-24 UNF-2A	.022 ±.010 thickness (0.56) (0.25)	.062 ±.015 x (1.57) (0.38) .125 ±.015 (3.18) (0.38)
0021	.099 (2.51)	.140 (3.56)	.090 (2.29)	.100 (2.54)	.235 (5.97)	.265 (6.73)	.3125-24 UNF-2A	.022 ±.010 thickness (0.56) (0.25)	.062 ±.015 x (1.57) (0.38) .125 ±.015 (3.18) (0.38)
0022	.100 (2.54)	.190 (4.83)	.080 (2.03)	.100 (2.54)	.190 (4.83)	.210 (5.33)	.250-28 UNF-2A	.018 ±.003 thickness (0.46) (0.08)	.070 ±.020 dia (1.78) (0.51)
0023	.100 (2.54)	.190 (4.83)	.080 (2.03)	.100 (2.54)	.190 (4.83)	.210 (5.33)	.250-28 UNF-2A	.018 ±.003 thickness (0.46) (0.08)	.070 ±.020 dia (1.78) (0.51)
0024	.100 (2.54)	.190 (4.83)	.080 (2.03)	.100 (2.54)	.190 (4.83)	.210 (5.33)	.250-28 UNF-2A	.018 ±.003 thickness (0.46) (0.08)	.070 ±.020 dia (1.78) (0.51)
0025	.100 (2.54)	.190 (4.83)	.080 (2.03)	.100 (2.54)	.190 (4.83)	.210 (5.33)	.250-28 UNF-2A	.018 ±.003 thickness (0.46) (0.08)	.070 ±.020 dia (1.78) (0.51)
0026	.100 (2.54)	.190 (4.83)	.080 (2.03)	.100 (2.54)	.190 (4.83)	.210 (5.33)	.250-28 UNF-2A	.018 ±.003 thickness (0.46) (0.08)	.070 ±.020 dia (1.78) (0.51)
0027	.100 (2.54)	.190 (4.83)	.080 (2.03)	.100 (2.54)	.190 (4.83)	.210 (5.33)	.250-28 UNF-2A	.018 ±.003 thickness (0.46) (0.08)	.070 ±.020 dia (1.78) (0.51)
0028	.100 (2.54)	.190 (4.83)	.080 (2.03)	.100 (2.54)	.190 (4.83)	.210 (5.33)	.250-28 UNF-2A	.018 ±.003 thickness (0.46) (0.08)	.070 ±.020 dia (1.78) (0.51)
0029	---	.140 (3.56)	---	.100 (2.54)	.235 (5.97)	.265 (6.73)	.3125-24 UNF-2A	.022 ±.010 thickness (0.56) (0.25)	.062 ±.015 x (1.57) (0.38) .125 ±.015 (3.18) (0.38)
0030	.100 (2.54)	.190 (4.83)	.088 (2.24)	.098 (2.49)	.190 (4.83)	.210 (5.33)	.250-28 UNF-2A	.022 ±.010 thickness (0.55) (0.25)	.060 ±.020 dia (1.52) (0.51) or .070 ±.010 dia (1.78) (0.25) or .050 ±.010 x (1.27) (0.25) .070 ±.010 (1.78) (0.25)

FIGURE 1. Case dimensions and circuit diagrams - Continued.

Dash no.	F		G		H		J	K	L
	Min	Max	Min	Max	Min	Max	Mounting thread	Internal tooth lockwasher	Wire hole
0031	---	.140 (3.56)	---	.100 (2.54)	.240 (6.10)	.260 (6.60)	.3125-24 UNF-2A	.025 ±.010 thickness (0.64) (0.25)	.062 ±.015 x (1.57) (0.38) .125 ±.015 (3.18) (0.38)
0032	---	.130 (3.30)	---	.100 (2.54)	.196 (4.98)	.206 (5.23)	.250-28 UNF-2A	.025 ±.010 thickness (0.64) (0.25)	.060 ±.020 dia (1.52) (0.51)
0033	---	.130 (3.30)	---	.100 (2.54)	.195 (4.95)	.205 (5.21)	.250-28 UNF-2A	.025 ±.010 thickness (0.64) (0.25)	.060 ±.020 dia (1.52) (0.51)
0034	.100 (2.54)	.190 (4.83)	.080 (2.03)	.100 (2.54)	.190 (4.83)	.210 (5.33)	.250-28 UNF-2A	.018 ±.003 thickness (0.46) (0.08)	.070 ±.020 dia (1.78) (0.51)
0035	.100 (2.54)	.190 (4.83)	.057 (1.45)	.077 (1.96)	---	.186 (4.72)	.216-32 UNEF-2A	.022 ±.010 thickness (0.56) (0.25)	.063 (1.60) max or .050 x .070 (1.27) (1.78)
0036	.100 (2.54)	.190 (4.83)	.057 (1.45)	.077 (1.96)	---	.186 (4.72)	.216-32 UNEF-2A	.022 ±.010 thickness (0.56) (0.25)	.063 (1.60) max or .050 x .070 (1.27) (1.78)
0037	.100 (2.54)	.190 (4.83)	.080 (2.03)	.100 (2.54)	---	.260 (6.60)	.3125-24 UNF-2A	MS35336-62	.062 ±.015 x (1.57) (0.38) .125 ±.015 (3.18) (0.38)

FIGURE 1. Case dimensions and circuit diagrams - Continued.

TABLE I. Electrical characteristics.

Cap. (µF)	Rated voltage (volts) DC	Rated voltage (volts) 2/ AC	Circuit diagram	Max current (amperes)	Voltage drop (volts) DC	Voltage drop (volts) AC	Minimum insertion loss (dB) in accordance with MIL-STD-220 1/ At +25°C 30 kHz	50 kHz	75 kHz	100 kHz	150 kHz	300 kHz	500 kHz	1 MHz	10 MHz	1 GHz	At -55°C and +125°C 30 kHz	50 kHz	75 kHz	100 kHz	150 kHz	300 kHz	500 kHz	1 MHz	10 MHz	1 GHz	Dash no.
.5	300	125	L_1	10	.30	1.2	5	-	-	-	19	25	-	30	57	70	4	-	-	-	18	24	-	30	56	70	0012
.25	200	125	L_1	2	.20	1.2	-	5	-	11	15	25	-	45	70	70	-	-	-	11	15	25	-	45	70	70	0029
.5	200	125	Pi	2	.22	1.2	-	4	-	24	36	54	-	80	80	70	-	-	-	21	34	52	-	80	80	70	0006
.25	200	125	L_1	3	.20	1.2	2	6	-	-	15	20	-	34	67	70	-	4	-	-	13	18	-	32	65	70	0016
.25	200	125	L_1	3	.15	1.2	-	5	-	10	14	21	-	39	70	70	-	-	-	9	13	20	-	39	70	70	0020
.25	200	125	L_1	5	.10	1.2	-	5	-	10	13	19	-	32	69	70	-	-	-	9	12	18	-	31	68	70	0021
.25	200	125	L_2	5	.75	1.2	2	5	-	-	15	21	-	32	60	70	2	5	-	-	15	21	-	32	60	70	0030
.5	200	125	Pi	5	.10	1.2	-	-	-	-	10	28	-	64	80	70	-	-	-	-	8	26	-	62	80	70	0004
.5	200	125	Pi	10	.75	1.2	-	-	-	-	16	18	-	48	80	70	-	-	-	-	15	17	-	48	80	70	0005
.36	200	125	L_1	20	.10	1.2	-	9	-	14	19	25	-	35	57	70	-	-	-	13	17	23	-	34	55	70	0001
.36	200	125	L_2	20	.10	1.2	-	9	-	14	19	25	-	35	57	70	-	-	-	13	17	23	-	34	55	70	0002
-	150	125	Pi	.5	.18	1.2	-	15	-	35	46	65	70	70	70	70	-	14	-	34	45	64	70	70	70	70	0032 3/
-	150	125	Pi	1	.25	1.2	-	-	-	6	23	40	50	70	80	80	-	-	-	3	20	37	47	67	80	80	0033 3/

See footnotes at end of table.

TABLE I. Electrical characteristics - Continued.

Cap. (µF)	Rated voltage (volts) DC	Rated voltage (volts) 2/ AC	Circuit diagram	Max current (amperes)	Voltage drop (volts) DC	Voltage drop (volts) AC	Minimum insertion loss (dB) in accordance with MIL-STD-220 1/ At +25°C 30 kHz	50 kHz	75 kHz	100 kHz	150 kHz	300 kHz	500 kHz	1 MHz	10 MHz	1 GHz	At -55°C and +125°C 30 kHz	50 kHz	75 kHz	100 kHz	150 kHz	300 kHz	500 kHz	1 MHz	10 MHz	1 GHz	Dash no.
.25	150	125	L_2	2	.13	1.2	-	-	-	-	8	15	20	30	68	70	-	-	-	-	7	14	19	29	67	70	3/ 0010
.15	150	125	L_1	3	.15	1.2	-	-	-	-	8	15	-	30	68	70	-	-	-	-	7	14	-	29	67	70	3/ 0015
.3	150	125	Pi	3	.15	1.2	-	-	-	-	-	20	37	55	80	80	-	-	-	-	-	18	35	53	80	80	3/ 0019
.5	150	125	Pi	3	.30	1.2	16	23	-	30	41	51	61	80	80	80	15	22	-	29	40	50	60	80	80	80	0031
.33	150	125	L_1	10	.08	1.2	-	9	-	14	18	24	28	34	54	70	-	8	-	13	17	23	27	33	53	70	0011
.25	150	125	L_2	10	.30	1.2	-	6	-	12	14	21	25	30	54	70	-	5	-	11	13	20	24	29	53	70	0013
-	100	-	Pi	.1	1.0	-	40	-	60	68	70	70	70	70	70	70	38	-	60	68	70	70	-	70	70	70	3/ 0022
1.0	100	-	Pi	.25	1.0	-	28	-	52	60	70	70	70	70	70	70	28	-	52	60	70	70	-	70	70	70	3/ 0023
.75	100	-	L_1	.5	.10	-	13	18	-	-	33	44	-	64	70	70	11	16	-	-	31	42	-	62	68	70	0018
1.0	100	-	Pi	.5	.50	-	18	-	40	49	59	70	-	70	70	70	18	-	40	49	59	70	-	70	70	70	3/ 0024
1.0	100	-	Pi	1	.25	-	-	-	22	32	48	64	-	70	70	70	-	-	22	32	48	64	-	70	70	70	3/ 0025
1.0	100	-	Pi	2	.13	-	-	-	-	-	30	48	-	70	70	70	-	-	-	-	30	48	-	70	70	70	3/ 0026
1.0	100	-	Pi	3	.11	-	-	-	-	-	10	34	-	70	70	70	-	-	-	-	10	34	-	70	70	70	3/ 0027

See footnotes at end of table.

USA Information Systems, Inc. (757)491-7525 / (800)872-8830 www.usainfo.com

TABLE I. Electrical characteristics - Continued.

Cap. (µF)	Rated voltage (volts) DC	Rated voltage (volts) 2/ AC	Circuit diagram	Max current (amperes)	Voltage drop (volts) DC	Voltage drop (volts) AC	Minimum insertion loss (dB) in accordance with MIL-STD-220 1/ At +25°C 30 kHz	50 kHz	75 kHz	100 kHz	150 kHz	300 kHz	500 kHz	1 MHz	10 MHz	1 GHz	At -55°C and +125°C 30 kHz	50 kHz	75 kHz	100 kHz	150 kHz	300 kHz	500 kHz	1 MHz	10 MHz	1 GHz	Dash no.
1.0	100	-	Pi	5	.10	-	-	-	-	22	39	58	-	80	80	80	-	-	-	20	37	56	-	80	80	80	0009
1.5	100	-	Pi	5	.05	-	-	-	-	-	-	17	-	55	70	70	-	-	-	-	-	14	-	45	70	70	0014 3/
.75	100	-	L_1	10	.10	-	10	15	-	-	26	29	-	38	44	70	8	13	-	-	24	27	-	36	42	70	0017
1.0	100	-	Pi	10	.03	-	9	-	12	18	24	29	-	40	52	62	9	-	12	18	24	29	-	40	52	62	0028
-	100	-	Pi	10	.03	-	9	-	12	18	24	29	-	40	52	62	9	-	12	18	24	29	-	40	52	62	0034 3/
1.4	50	-	Pi	2	.14	-	-	-	-	33	46	65	76	80	80	80	-	-	-	31	44	63	74	78	78	80	0003
1.4	28	-	L_2	.45	.54	-	15	-	-	-	29	33	-	46	66	70	-	-	-	-	17	21	-	34	54	70	0008 3/
1.4	28	-	L_2	10	.10	-	15	-	-	-	28	31	-	42	56	70	-	-	-	-	16	19	-	30	44	70	0007
0.3	100	-	C	10	.04	-	-	10	-	15	19	25	-	35	55	70	-	8	-	13	17	23	-	35	55	70	0035
1.1	50	-	C	10	.04	-	-	17	-	23	28	33	-	44	48	70	-	15	-	21	26	31	-	44	48	70	0036
0.2	275	125	C	15	.075	-	-	9	-	13	15	21	-	31	51	70	-	7	-	11	13	19	-	31	51	70	0037

1/ Insertion loss measurements shall be made under full load over the frequency range of 100 kHz to 10 MHz. Insertion loss measurements above or below this frequency range shall be made under no-load.

2/ 0 to 400 Hz.

3/ Inactive for new design.

REQUIREMENTS:

Dimensions and configuration: See figure 1.

Weight: See figure 1.

Case: Metal.

Terminals: Solderable.

Operating temperature range: -55°C to +125°C.

Rated voltage: See table I.

Rated current: See table I.

Insertion loss: At 25°C and temperature extremes, see table I.

Creepage and clearance: Not applicable.

Voltage conditioning (applicable to quality conformance inspection only): Prior to group A inspection, 100 percent of each lot of filters shall be subjected to voltage conditioning as follows:

Test temperature: +125°C +4°C, -0°C.

Test voltage:
For dc rated filters: 2 times rated voltage.
For ac and dc rated filters: 1.2 times rated ac voltage at maximum rated frequency.

Charging current: Shall not exceed 50 milliamperes.

Duration of exposure to test voltage: 100 ±4 hours (-0001 through -0021, and -0029 through -0033); and 164 ±4 hours (-0022 through -0028 and -0034).

Measurements after completion of exposure: While filters are stabilized at +125°C, insulation resistance shall be measured at +125°C. Filters shall then be stabilized at +25°C, and insulation resistance shall be measured.

Insulation resistance (at +125°C): Shall be not less than 10 percent of the +25°C requirement.

Insulation resistance (at +25°C): Shall be not less than 1,000 megohms.

A reject shall be defined as a filter whose insulation resistance does not meet the +125°C and +25°C requirements specified in this test. If the total rejects from any particular lot exceed 10 percent, the entire lot shall be rejected.

Radiographic inspection: Following voltage conditioning and prior to group A inspection, 100 percent of each lot of filters shall be subjected to radiographic inspection as follows:

a. Radiographic quality: The radiograph shall render a clear sharp image of the penetrameter.

b. Image quality indicator: A radiograph of the penetrameter shall be included on each radiographic film. The penetrameter may be made from a sample filter of the same type as the filter being radiographed, with an AWG number 48 tungsten wire mounted across the filter body.

c. Positions of specimen: Two views normal to the major axis of the part shall be taken. One view shall be 90 degrees from the other.

d. Evaluation of images: Special kind of viewing equipment; magnifying glass of 10X magnification or a 7X optical comparator.

e. Examination: The filter examination shall include, but not be limited to, inspection for faulty lead connections, misalignment of internal parts, solder defects, and physical damage of electrical elements.

(1) Extraneous material.

(a) There shall be no loose metallic particles (solder balls) greater than .010 inch (.25 mm) in the major dimension.

(b) There shall be no solder splash on the winding or the capacitor.

(c) There shall be evidence of a 240 degree minimum solder joint between capacitor and case.

(d) There shall be no metallic objects bridging the coil to the capacitor nor contact between coil and capacitor.

(2) Internal damage: There shall be no nicks, gouges, cracks, or other imperfections in the wire, core, capacitor, or other internal elements.

(3) Alignment of internal elements: The capacitor element shall be properly seated within its defined location and shall not be tilted or misaligned more than 10 degrees with respect to the case centerline.

(4) Bonds: There shall be no evidence of improper bonding (defective welds) on internal lead connections.

f. Failures from the radiographic inspection shall be removed from the lot.

Seal: Method 112, test condition A, MIL-STD-202.

Capacitance to ground: See table I.

Capacitance tolerance: +150 percent, -0 percent.

Temperature rise: +25°C, maximum (-0001 through -0009, -0014 through -0018, and -0020 through -0037); and +40°C, maximum (-0010 through -0013, and -0019).

Dielectric withstanding voltage: Method 301, MIL-STD-202.

Test temperature: +25°C.

DC test voltage: 2.5 times the rated dc voltage applied between either terminal and ground for 1 to 5 seconds.

Maximum charging current: 50 milliamperes.

Barometric pressure (reduced): Method 105, test condition B (50,000 feet), MIL-STD-202.

Dielectric withstanding voltage: 125 percent of the rated dc voltage.

Maximum charging current: 50 milliamperes.

Insulation resistance: Method 302, MIL-STD-202.

Test potential: 100 V dc or rated dc voltage, whichever is less.

Maximum charging current: 50 milliamperes.

Measurements at +25°C after test: Insulation resistance shall be not less than 1,000 megohms (500 megohms for -0036 only).

Dissipation factor: 3 percent maximum.

Voltage drop: See table I.

Insertion loss: In accordance with MIL-F-15733 at 25°C and temperature extremes.

Insertion loss (check test): In accordance with MIL-F-15733.

Overload: Filters shall be suspended by their terminals in free air at an ambient temperature of +25°C ±5°C. A test current of 140 percent of rated current at maximum rated frequency shall be applied for 15 minutes. After the filter has returned to room temperature, insulation resistance and voltage drop measurements shall meet initial requirements.

Transient voltage: Filters shall withstand the transient and spike voltages specified in MIL-STD-704 for category B equipment.

Qualification inspection: In accordance with MIL-F-15733, as an additional test in group 1, following the overload test.

Quality conformance inspection: In accordance with MIL-F-15733, group B inspection, as an additional test following the overload test.

Measurements at +25°C after test: Insulation resistance and voltage drop shall meet the initial requirements.

Terminal strength: Method 211, test condition A (pull), MIL-STD-202.

Force: 5 pounds.

Resistance to soldering heat: Method 210, test condition B, MIL-STD-202.

Salt spray (corrosion): Method 101, test condition A, MIL-STD-202.

Thermal shock and immersion:

Thermal shock: Method 107, test condition A, MIL-STD-202, except the temperature at step 3 shall be +125°C.

Immersion: Method 104, test condition A, MIL-STD-202.

Measurements after final cycling:

Dielectric withstanding voltage: 90 percent of the initial voltage shall be applied for 5 ±1 seconds.

Maximum charging current: 50 milliamperes.

Insulation resistance: Shall be not less than 30 percent of the initial requirements.

Insertion loss (check test): Shall meet the initial requirements.

Shock (specified pulse): Method 213, test condition I, MIL-STD-202.

Electrical load: 100 percent of the rated dc voltage shall be applied between terminals and case.

Vibration, high frequency: Method 204, test condition D (20 G), MIL-STD-202.

Electrical load: Rated dc voltage and current shall be applied continuously during test.

Test during vibration: During the last cycle in each direction, an electrical measurement shall be made to determine intermittent open or short-circuiting.

After vibration test: Filters shall be subjected to and shall meet the initial requirements of the insertion loss (check test).

Moisture resistance: Method 107, test condition A, MIL-STD-202, except the temperature at step 3 shall be +125°C. No measurements shall be made before and after cycling. Filters shall then be tested in accordance with method 106, MIL-STD-202.

Initial measurements: Not applicable.

Polarization voltage: 100 V dc or rated dc voltage, whichever is less.

Measurements after 24-hour drying period:

Dielectric withstanding voltage: 90 percent of the initial voltage shall be applied for 5 ±1 seconds.

Maximum charging current: 50 milliamperes.

Insulation resistance: Shall meet the initial requirements.

Insertion loss (check test): Shall meet the initial requirements.

Life: Method 108, MIL-STD-202, test condition D (1,000 hours) for qualification inspection; test condition B (250 hours) for group C inspection.

Test temperature: +125°C.

Test voltage: 1.2 times rated ac (rms) voltage for ac rated filters and 1.4 times rated dc voltage for dc rated filters.

Measurements after test:

Dielectric withstanding voltage: 90 percent of the initial voltage shall be applied for 5 ±1 seconds.

Maximum charging current: 50 milliamperes.

USA Information Systems, Inc.
(757)491-7525 / (800)872-8830
www.usainfo.com

Insulation resistance: Shall be not less than 30 percent of the initial requirements.

Insertion loss (check test): Shall meet the initial requirements.

Solderability: Method 208, MIL-STD-202.

QUALITY ASSURANCE PROVISIONS:

Qualification:

Qualification testing and approval for M15733/34-0005, -0006, and -0001 shall be sufficient to grant qualification approval to M15733/34-0029, -0006, -0016, -0020, -0021, -0030, -0004, -0005, -0001, and -0002.

Qualification testing and approval for M15733/34-0010, -0019, and -0011, shall be sufficient to grant qualification approval to M15733/34-0010, -0015, -0019, -0011, and -0013.

Qualification testing and approval for M15733/34-0023 and -0028 shall be sufficient to grant qualification approval to M15733/34-0023, -0018, -0024, -0025, -0026, -0027, -0009, -0014, -0017, -0028, and -0035.

Initial qualification to MIL-F-15733/34 may be granted based on qualification to MIL-F-28861 or MIL-C-83439 as indicated in table III. Extension of qualification from MIL-F-28861 or MIL-C-83439 to MIL-F-15733/34 is permissible under the following provisions:

a. The MIL-F-15733/34 parts use the same design and dielectric characteristics as the part from which qualification is extended.

b. The MIL-F-28861 or MIL-C-83439 qualification data verifies that the physical and electrical characteristics of the MIL-F-15733/34 parts are satisfied.

PIN: M15733/34- (dash number from table I).

Supersession data: See table II.

TABLE II. Supersession data.

Superseded military PIN	Superseding specification	Superseding military PIN
M15733/34-0008	MIL-F-15733/34	M15733/34-0007
M15733/34-0010	MIL-F-28861/5	M28861/05-020TB
M15733/34-0014	MIL-F-28861/2	M28861/02-024TB
M15733/34-0015	MIL-F-28861/5	M28861/05-019TB
M15733/34-0019	MIL-F-28861/5	M28861/05-021TB
M15733/34-0022	MIL-F-28861/2	M28861/02-003TB
M15733/34-0023	MIL-F-28861/2	M28861/02-003TB
M15733/34-0024	MIL-F-28861/2	M28861/02-006TB
M15733/34-0025	MIL-F-28861/2	M28861/02-006TB
M15733/34-0026	MIL-F-28861/2	M28861/02-009TB
M15733/34-0027	MIL-F-28861/2	M28861/02-009TB
M15733/34-0032	MIL-F-28861/5	M28861/05-018TB
M15733/34-0033	MIL-F-28861/5	M28861/05-018TB
M15733/34-0034	MIL-F-15733/39	M15733/39-0015

TABLE III. Extension of qualification.

Qualification to		Will qualify MIL-F-15733/34
Specification	PIN	
MIL-F-28861/2	M28861/02-003TB	-0023
MIL-F-28861/2	M28861/02-006TB	-0025
MIL-F-28861/2	M28861/02-009TB	-0026
MIL-F-28861/2	M28861/02-009TB	-0027
MIL-F-28861/2	M28861/02-024TB	-0014
MIL-F-28861/5	M28861/05-019TB	-0015
MIL-F-28861/5	M28861/05-021TB	-0019
MIL-C-83439/1	M83439/01-001	-0035
MIL-C-83439/1	M83439/01-002	-0036
MIL-C-83439/3	M83439/03-001	-0037

Cataloging information: Dash numbers 0035, 0036, and 0037 shall be cataloged under FSC 5910 as feed-through ceramic capacitors. Dash numbers 0001 through 0034 shall be cataloged under FSC 5915 as radio frequency interference filters.

Revision letters are not used to denote changes due to the extensiveness of the changes.

CONCLUDING MATERIAL

Custodians:
Army - ER
Navy - EC
Air Force - 85

Review activities:
Army - MI
Navy - SH
Air Force - 99
DLA - ES

User activities:
Army - AT, AV, ME
Navy - AS, MC, OS
Air Force - 19

Preparing activity:
Navy - EC

Agent:
DLA - ES

(Project 59GP-0094)