NOV 2 1998
22

INCH-POUND

MIL-DTL-28804D
10 September 1998
SUPERSEDING
MIL-C-28804C
12 April 1991

DETAIL SPECIFICATION

CONNECTORS, PLUG AND RECEPTACLE, ELECTRIC, RECTANGULAR, HIGH DENSITY, POLARIZATION CENTER JACKSCREW GENERAL SPECIFICATION FOR

This specification is approved for use by all Departments and Agencies of the Department of Defense.

1. SCOPE

1.1 Scope. This detail specification covers the general requirements for rectangular electrical connectors, with size 22, nonremovable, solder type contacts, and rear removable crimp type contacts, environment resistant and non-environment, intended for use in electronic and electrical equipment (see 6.1 for restrictions on intended use and application).

1.2 Classification.

1.2.1 Classes:

G - General purpose, nonmagnetic, high density, size 22, rear release, crimp removable contacts.
P - Environmental resisting, potting type, nonmagnetic, high density, size 22, rear release, crimp removable contacts.
E - Environmental resisting, nonmagnetic, high density, size 22, rear release, crimp removable contacts.
S - Solder termination, general purpose, high density, nonremovable, size 22 contacts.
SE - Solder termination, interfacial seal, high density, nonremovable, size 22 contacts.

1.2.2 Part or Identifying Number (PIN). The PIN shall consist of the letter "M", the basic number of the specification sheet, and an assigned dash number as shown in the following example:

M	28804/1	-1	N
Military designator	Specification sheet number	Dash number	Polarization letter (see 3.5.5)

2. APPLICABLE DOCUMENTS

2.1 General. The documents listed in this section are specified in sections 3 and 4 of this specification. This section does not include documents cited in other sections of this specification or recommended for additional information or as examples. While every effort has been made to ensure the completeness of this list, document users are cautioned that they must meet all specified requirements documents cited in sections 3 and 4 of this specification, whether or not they are listed.

2.2 Government documents.

2.2.1 Specifications, standards, and handbooks. The following specifications, standards, and handbooks form a part of this document to the extent specified herein. Unless otherwise specified, the issues of these documents are those listed in the issue of the Department of Defense Index of Specifications and Standards (DoDISS) and supplement thereto, cited in the solicitation (see 6.2).

Beneficial comments (recommendations, additions, deletions) and any pertinent data which may be of use in improving this document should be addressed to: Defense Supply Center Columbus, ATTN: DSCC-VAI, 3990 East Broad Street, Columbus, OH 43216-5000, by using the Standardization Document Improvement Proposal (DD Form 1426) appearing at the end of this document or by letter.

AMSC N/A
FSC 5935

DISTRIBUTION STATEMENT A. Approved for public release; distribution is unlimited.

USA Information Systems, Inc.
(757)491-7525 / (800)872-8830
www.usainfo.com

SPECIFICATIONS

FEDERAL

QQ-N-290-Nickel Plating (Electrodeposited).

DEPARTMENT OF DEFENSE

MIL-C-22520	-	Crimping Tools, Terminal, Hand, Wire Termination for Wire Barrel Sizes 20 Through 28.
MIL-W-22759	-	Wire, Electric, Fluoropolymer-Insulated, Copper or Copper Alloy.
MIL-L-23699	-	Lubricating Oil, Aircraft Turbine Engines, Synthetic Base.
MIL-G-45204	-	Gold Plating, Electrodeposited.
MIL-I-81969	-	Installing and Removal Tools Connector Electrical Contact General Specification For.
MIL-PRF-87257	-	Hydraulic Fluid, Fire Resistant; Low Temperature, Synthetic Hydrocarbon Base, Aircraft and Missile.

STANDARDS

MIL-STD-202	-	Test Methods for Electronic and Electrical Component Parts.
MIL-STD-889	-	Dissimilar Metals.
MIL-STD-1285	-	Marking of Electrical and Electronic Parts.
MIL-STD-1344	-	Test Methods for Electrical Connectors.
MIL-STD-1632	-	Insert arrangements for MIL-C-28804 High Density, Rectangular, Electrical Connectors.
MS27488	-	Plug, Sealing, Electric Connector.

(See supplement 1 for list of associated specification sheets and military standards).

(Unless otherwise indicated, copies of federal and military specifications, standards, and handbooks are available from the Defense Printing Service Detachment office, Building 4D, Customer Service, 700 Robbins Avenue, Philadelphia, PA 19111-5094.)

2.3 Non-Government publications. The following documents form a part of this document to the extent specified herein. Unless otherwise specified, the issues of the documents which are DoD adopted are those listed the issue of the DoDISS cited in the solicitation. Unless otherwise specified, the issues of documents not listed in the DoDISS are the issues of the documents cited in the solicitation (see 6.2).

AMERICAN SOCIETY OF MECHANICAL ENGINEERS (ASME)

ASME B46.1	-	Surface Texture (Surface Roughness, Waviness, and Lay).
AS31971	-	Gage Pin for Socket Contact Engagement Test.

(Application for copies should be addressed to the American Society of Mechanical Engineers, 11 West 42nd street, 13th floor, New York 10017.)

AMERICAN NATIONAL STANDARDS INSTITUTE, INC (ANSI)

ANSI/NCSL Z540-1-1994 - Calibration Laboratories and Measuring and Test Equipment, General Requirements.

(Application for copies should be addressed to the American National Standards Institute, Inc. 1430 Broadway, New York, NY 10017.)

AMERICAN SOCIETY FOR TESTING AND MATERIAL (ASTM)

ASTM A 342	-	Standard Test Methods for Permeability of Feebly Magnetic Materials.
ASTM B488	-	Standard Specification for Electrodeposited Coatings of Gold for Engineering Uses.
ASTM B579	-	Standard Specification for Electrodeposited Coatings of Tin-Lead Alloy (Solder Paste).
ASTM PS 2	-	Provisional Standard Specification for Molding Plastics, Electrical, Thermoplastic.

(Application for copies should be addressed to the American Society for Testing and Materials, 1916 Race Street, Philadelphia, PA 19103-1187.)

ELECTRONIC INDUSTRIES ASSOCIATION (EIA)

EIA-364-56 1987 - Test Procedure No. 56, Resistance to Soldering heat, Test Procedure for Electrical Connectors.

(Application for copies should be addressed to the Electronic Industry Association, Engineering Department, 2001 Eye Street NW, Washington, DC 20006.)

(Non-Government standards and other publications are normally available from the organizations that prepare or distribute the documents. These documents also may be available in or through libraries or other informational services.)

2.4 Order of precedence. In the event of a conflict between the text of this document and the references cited herein (except for related associated specifications, specification sheets, or MS sheets), the text of this document takes precedence. Nothing in this document, however, supersedes applicable laws and regulations unless a specific exemption has been obtained.

3. REQUIREMENTS

3.1 Specification sheets. The individual item requirements shall be as specified herein and in accordance with the applicable specification sheet. In the event of any conflict between the requirements of this specification and the specification sheets, the latter shall govern.

3.2 Qualification. Connectors furnished under this specification shall be products that are authorized by the qualifying activity for listing on the applicable qualified products list before contract award (see 4.5 and 6.3).

3.3 Materials. Example reference materials are identified herein. However, when an example reference material is not identified, a material shall be used which will enable the connectors, sockets and accessories to meet the performance requirements of this specification. Acceptance or approval of a constituent material shall not be construed as a guaranty of acceptance of the finished product.

3.3.1 Reference critical interface, materials, plating, and processes. The identified reference critical interface materials, plating, and processes have been established to provide assurances that connectors manufactured to this specification will properly interface to similar industry standard or government specified connector systems without problems of electrochemical contamination of critical electrical or mechanical interfaces or generation of incompatible mechanical interface surface wear products. The manufacturer of connectors supplied to this specification are allowed to use alternate recognized industry standard materials, plating, and processes from those identified in 3.3 of this specification. Alternate materials, plating and processes used must be coordinated with the qualifying activity as part of the qualification process. Use of alternates to those referenced guidance items by the supplier must not result in inferior short or long term performance or reliability of supplied connectors as compared with connectors manufactured using the referenced materials, plating, or processes. Short or long term failures or reliability problems due to use of these alternates shall be the responsibility of the supplier.

3.3.2 Recycled, recovered, or environmentally preferable material. Recycled, recovered, or environmentally preferable materials should be used to the maximum extent possible provided that the material meets or exceeds the operational and maintenance requirements, and promotes economically advantageous life cycle costs.

3.3.3 Dissimilar metals. When dissimilar metals are employed in intimate contact with each other, protection against electrolytic corrosion shall be provided, for guidance information reference MIL-STD-889.

3.3.4 Nonmagnetic materials. All parts used in connectors shall be made from materials which are classified as nonmagnetic (see 3.6.1).

3.3.5 Contact materials. Contacts shall be made of suitably conductive copper based alloys and shall not contain greater than 3.5 percent lead content. All contacts shall be suitably protected from corrosion. When contacts are in-process plated in strip form, the absence of plating in the separation area is acceptable, provided the area is nonfunctional and any corrosion products formed as a result of salt spray testing (see 4.7.16) does not appear in contact mating or termination area.

3.3.6 Electrical contact gold plating guidelines. Electrical contacts gold plated in accordance with ASTM B488, type 2, code C, .00005 inch (0.0013 mm) minimum thickness.

3.3.7 Contact plating (classes G, P, and E). Contacts shall be gold-plated (see 3.3.6), over a suitable underplating (underplating shall have no silver content), except that the accessory (hood) on socket contacts shall be suitably protected from corrosion.

3.3.8 Contact finish (classes S and SE). The contact finish on the bodies shall be gold applied either overall (see 3.3.8.1) or localized (see 3.3.8.2).

3.3.8.1 Overall finish. Contacts shall be gold-plated (see 3.3.6).

3.3.8.2 Localized finish. Contact bodies shall be overall nickel plated in accordance with QQ-N-290, except plating thickness shall be 50 to 150 microinches (1.27 µm - 3.81 µm) thick.

3.3.8.3 Contact mating area. The contact mating area, as shown on figure 1, shall be gold-plated (see 3.3.6).

3.3.8.4 Printed wiring tails. Contact wiring tails shall be tin-lead plated in accordance with ASTM B579. Solder dipping shall be required if stamping leads, providing it meets the procedures and requirements of MIL-STD-202, method 208.

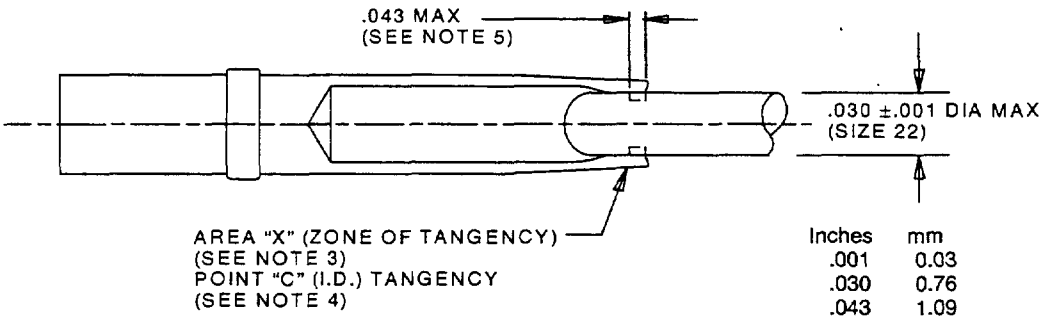

SOCKET CONTACT WITH INTEGRAL PRESSURE MEMBER ONLY

NOTES:
1. Dimensions are in inches.
2. Metric equivalents are given for general information only.
3. Localized finish: Apply gold to the inside and outside diameter of the contact in area "X". Measure gold thickness on outside diameter of the contact at point "C".
4. On socket contacts with integral pressure members, area "X" (zone tangency) extends from the tip of the contact to .020 inch (0.51 mm) beyond a the point of tangency, point "C" on the outside diameter of the contact.
5. Point at which a square-ended pin of the same basic diameter as the mating contact first engages the socket contact spring.

FIGURE 1. Contact mating area.

3.3.9 Dielectric materials.

3.3.10 Insert. Insert materials shall be thermoplastic polyester in accordance with ASTM PS 2, type GPT-30F.

3.3.11 Grommets and interfacial seals. Materials shall be high grade dielectric having hardness, electrical, and mechanical characteristics suitable for the purpose intended.

3.3.12 Polarizing and engaging hardware. Polarizing and engaging hardware shall be of high grade corrosion resistant material or a material treated to resist corrosion which allows the complete connector assembly to meet the requirements of this specification.

3.4 Design, construction, and physical dimensions. Connectors shall be of the design, construction and physical dimensions specified (see 3.1). Connectors shall be designed so that neither the pins nor the sockets will be damaged during normal mating of counterpart connectors.

3.4.1 Contact design. Contacts shall be as specified on the individual performance specification sheet (see 3.1 and 3.5.1).

3.4.1.1 Printed wiring tails (solder contacts). Printed wiring tails (solder contacts) shall be nonremovable from the insert and shall have solder post terminals as specified (see 3.1).

3.5 Critical interface requirements.

3.5.1 Removable contacts. Removable contacts shall be in accordance with M28804/9 and M28804/10. The inserts shall be designed to provide positive individual contact retention, and individual contact release from the wire side of the connector, using an M81969/01-04 tool. The insert design shall permit individual insertion and extraction of contacts without use of a retention ring or removal of the insert or sealing members. The individual contact retention members shall be surrounded by rigid dielectric material configured so as to limit their insertion and extraction shall be possible with a full complement of maximum outside diameter (OD) wire (see table I). Crimp barrels shall be designed to be crimped by a tool conforming to MIL-C-22520/2. Locators shall be as specified (see 3.1). For indirect shipment, connectors may be ordered without contacts (see 6.2).

TABLE I. Wire sizes and diameters.

Wire size (AWG)	Finished wire OD 1/ inch (mm)	
	Minimum	Maximum
26, 24, 22	.030 (0.76)	.054 (1.37)

1/ Metric equivalent is for reference purposes only.

3.5.2 Insert design and construction. Inserts shall be designed with suitable sections and radii such that they will not readily chip, crack, or break in assembly or in normal service. Inserts shall be molded or bonded one-piece construction and shall not be hollowed out for weight saving purposes. Pin entry openings on socket insert faces shall be as small as practicable. Socket inserts shall provide adequate protection against a pin contacting a socket before the mating pair of connectors has been polarized. The contact retaining system shall be free of foreign material, adhesive, or any obstruction that would prevent smooth contact insertion and positive retention.

3.5.3 Insert arrangement. The insert arrangement shall be as indicated in MIL-STD-1632.

3.5.4 Contact alignment and stability. With all contacts in place, the alignment of pin and socket contacts shall always permit engagement irrespective of buildup of allowable tolerances on hole locations, distortion of contacts due to crimping, and insert location in the shell.

3.5.5 Polarization. Polarization shall be accomplished by hex keys (see figure 2) and shall be as specified (see 3.1). Polarization shall be accomplished before engagement of pins and sockets.

3.5.6 Interchangeability. All connectors having the same PIN shall be completely interchangeable with each other with respect to installation (physical) and performance (function) as specified herein. Solder and crimp contact connectors shall be intermateable (see 3.1).

3.5.7 Sealing plugs (class E only). Insulated plugs shall be provided for sealing spare contact holes. The plugs shall be in accordance with MS27488. For indirect shipment, connectors may be ordered without sealing plugs (see 6.2).

3.5.8 Interfacial seal. For classes E and P, a resilient interfacial seal shall be bonded to the pin insert; for class SE, the seal shall not be bonded.

3.6 Performance. Connectors shall be designed to meet the performance requirements specified herein.

3.6.1 Magnetic permeability. When measured as specified in 4.7.2, the relative permeability of connectors shall not exceed 2 mu.

3.6.2 Maintenance aging (crimp contact connectors only). After testing as specified in 4.7.3, all crimp-contact connectors shall be capable of conforming to the requirements of 3.6.3 and 3.6.4.

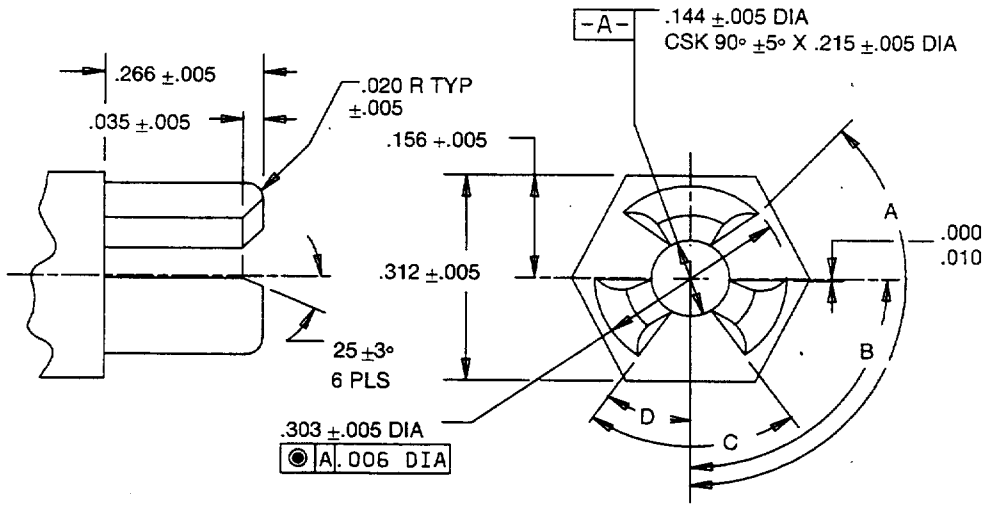

Inches	mm	Inches	mm
.005	0.13	.156	3.96
.010	0.25	.215	5.46
.020	0.51	.266	6.76
.035	0.89	.303	7.70
.144	3.66	.312	7.92

POLARIZATION	A+0 30"	B+0 30"	C+0 30"	D+0 30"
N, V, W	135°	90°	90°	45°
X, Y, Z	137° 30"	90°	85°	42° 30"

POLARIZATION KEY

NOTES:
1. Dimensions are in inches.
2. Metric equivalents are given for general information only.
3. To polarize connector, the boss is mounted in the insert with largest opening adjacent to the desired position ("N" polarization shown).

FIGURE 2. Polarization key.

3.6.3 Contact insertion and removal force. When tested as specified in 4.7.4, the axial forces required to insert and remove removable contacts shall conform with the applicable requirements of table II.

TABLE II. Contact insertion and removal forces.

	Maximum force pounds	
	Class	
	G and P	E
Insertion	3 (1.36 kg)	15 (6.80 kg)
Removal	4 (1.81 kg)	15 (6.80 kg)

3.6.4 Mating and unmating force. When tested as specified in 4.7.5, the force for mating and unmating of counterpart connectors shall meet the requirements of table III. When connectors are mated to the torque values of table III the maximum allowable dimension between flanges shall be .320 inch (8.13 mm). The connectors used for this test shall have the complete complement of contacts.

TABLE III. Mating and unmating force.

Shell size	Inch-pounds (newton meters) max 1/
8	.5 (2.2)
10	1.13 (5.03)
12	2.75 (12.23)
14	3.25 (14.46)
16	4.00 (17.79)
18	7.00 (31.14)

1/ Metric equivalent is for reference purposes only.

3.6.5 Contact retention. When tested as specified in 4.7.6, the axial displacement of the contacts shall not exceed .012 inch (0.30 mm) while under load. For classes G, E, P, contacts shall be retained in their inserts.

3.6.6 Dielectric withstanding voltage. When tested as specified in 4.7.7, unmated connectors shall show no evidence of breakdown or flashover. Corona shall not be considered as breakdown.

3.6.7 Insulation resistance. When tested as specified in 4.7.8, the insulation resistance of mated and unmated connectors shall conform to the requirements of table IV (see 3.1).

TABLE IV. Insulation resistance.

Class	Moisture conditioned samples (see 4.7.12)		All other samples
	After step 6	After 24 hours of conditioning	
	Megohms (min)	Megohms (min)	Megohms (min)
Unmated G, S, and SE	1	1,000	5,000
Mated E and P	1	100	5,000

3.6.8 Contact resistance. When tested as specified in 4.7.9, contact resistance for mated pairs of pin and socket contacts shall be as specified in table V (see 3.1).

TABLE V. Contact resistance.

Wire size	Test current	Classes G, E, and P		Classes S and SE	
		After salt spray	All others	After salt spray	All others
	Amperes	mV (max)	mV (max)	mV (max)	mV (max)
26	2.0	70	60	35	25
22	5.0	70	60	35	25

3.6.9 Contact engagement and separation force. When tested as specified in 4.7.10, socket contacts shall conform to the forces specified in table VI.

TABLE VI. Contact engagement and separation force.

Maximum individual engagement force (oz) using maximum test pin	Maximum average engagement force (oz) using maximum diameter test pin	Minimum separation force (oz) using minimum diameter test pin
12.0 (3.33 newtons)	9.5 (2.64 newtons)	0.7 (0.19 newtons)

3.6.10 Thermal shock. When subjected to the temperature extremes of table VII in accordance with 4.7.11, there shall be no damage detrimental to the operation of the connector.

TABLE VII. Temperature extremes.

Extremes	°C
Low	-55^{+0}_{-3}
High	$+125^{+3}_{-0}$

3.6.11 Humidity. When tested as specified in 4.7.12, connectors shall meet the requirements of dielectric withstanding voltage (see 3.6.6) and insulation resistance (see 3.6.7).

3.6.12 Vibration. When tested as specified in 4.7.13, mated connectors shall not be damaged and there shall be no loosening of parts due to vibration. Counterpart connectors shall be retained in engagement and there shall be no interruption of electrical continuity or current flow longer than 1 microsecond.

3.6.13 Shock (specified pulse). When tested as specified in 4.7.14, mated connectors shall not be damaged and there shall be no loosening of parts, nor shall there be an interruption of electrical continuity or current flow longer than 1 microsecond during the exposure to mechanical shock.

3.6.14 Durability. When tested as specified in 4.7.15, counterpart connectors shall show no mechanical or electrical defects detrimental to the operation of the engagement and separation forces after 500 cycles of mating and unmating (see 3.6.9).

3.6.15 Salt spray (corrosion). When sockets as specified in 4.7.16, mated connectors shall show no exposure of base metal due to corrosion which will affect performance as specified for mating and unmating forces(see 3.6.4) and contact resistance (see 3.6.8).

3.6.16 Oversize pin exclusion. When tested as specified in 4.7.17, socket contacts shall exclude the entry of a test pin .036 inch (0.91 mm) diameter. After testing, the contacts shall meet the requirements for a contact resistance (see 3.6.8).

3.6.17 Probe damage. When tested as specified in 4.7.18, socket contacts shall meet the requirements of the contact engagement and separation force and shall show no evidence of visible damage (see 3.6.9).

3.6.18 Fluid immersion. When tested as specified in 4.7.19, unmated connectors shall meet the requirements of mating and unmating force (see 3.6.4).

3.6.19 Crimp contact deformation. When tested as specified in 4.7.20, crimped contacts shall conform to the requirements of this specification (see 3.6.19.1 and 3.6.19.2).

3.6.19.1 Deformation of crimped barrel. The out-of-roundness of the crimped barrel shall not exceed the maximum diameter specified by more than .006 inch (0.15 mm).

3.6.19.2 Axial deformation. The axial bending of the crimped contact shall not exceed .015 inch (0.38 mm), which includes the maximum total indicator readings permitted the contact during its manufacturer.

3.6.20 Contact pin strength. When tested as specified in 4.7.21, the pin strength for crimp type pin contacts shall be such that a load moment of .32 inch-pound (1.4 N) will not produce a permanent set in excess of .005 inch (0.13 mm).

3.6.21 Crimp tensile strength. When tested as specified in 4.7.22, the tensile strength of crimp joints for individual contact shall conform to the requirements of table VIII.

TABLE VIII. Crimp tensile strength.

Wire size (AWG)	Tensile strength lbs minimum
26	5 (2.27 kg)
22	12 (5.44 kg)

3.6.22 Altitude immersion (classes P and E). When tested as specified in 4.7.23 the mated connector shall meet a minimum insulation resistance of 1,000 megohms and the requirements of dielectric withstanding voltage as specified in 4.7.7. The use of epoxy or potting material is permissible when the methods are approved by the qualifying activity.

3.6.23 Resistance to soldering heat. When tested in accordance with 4.7.24, the connectors shall be visually inspected and shall show no evidence of distortion or physical damage and shall meet the contact retention requirements of 3.6.5 and dimensional requirements of 3.4.

3.6.24 Solderability (printed wiring tails only). Solderable, nonremovable, printed wiring tails shall withstand the test specified in 4.7.25.

3.7 Marking. Connectors and accessories shall be permanently marked in accordance with MIL-STD-1285 where space permits, and as indicated below:

a. Complete PIN to be marked shall be as specified (see 3.1).

b. Manufacturer's CAGE code.

c. Manufacturer's date code.

d. Manufacturer's lot code (manufacturer's option).

e. Pin number 1 identifier.

3.7.1 Insert marking. The contact identification and arrangement shall be as specified (see 3.1). Letters or numerals shall be raised and clearly legible or shall appear in legible contrasting colors. Positioning and arrangement of the numerals shall be such as to avoid confusion between contacts. Markings shown in MIL-STD-1632 are for the pin insert front and socket rear. Socket face and pin rear are opposite tab, as specified.

3.8 Workmanship. Connectors and accessories shall meet all design dimensions and intermateability requirements of this specification. Loose contacts, poor molding fabrication, damage or improperly assembled contacts, peeling, or chipping of plating or finish, galling of mated parts, nicks and burrs of metal parts and post-molding warpage shall be considered adequate basis for rejection of items of quality inferior for the purpose intended.

4. VERIFICATION

4.1 Classification of inspection. The inspection requirements specified herein are classified as follows:

a. Qualification inspection (see 4.3)

b. Quality conformance inspection (see 4.6).

c. Verification of qualification (see 4.5.4).

4.2 Inspection conditions. Unless otherwise specified, all inspections shall be performed in accordance with the test conditions specified in (applicable test method document or applicable paragraph(s) in the specification).

4.2.1 Verification testing. The following identified tests and test methods assure socket integrity within typical operating conditions and applications. Alternate commercial industry standard test methods are allowed, however when an alternate method is used, the alternate method must be coordinated with the qualifying activity prior to performance of the test. The test methods described herein are proven methods and shall be the referee method in cases of dispute.

4.2.2 Test equipment and inspection facilities. Test and measuring equipment and inspection facilities of sufficient accuracy, qualify and quality to permit performance of the required inspection shall be established and maintained by the contractor. The establishment and maintenance of a calibration system to control the accuracy of the measuring and test equipment (i.e. ANSI/NCSL Z540-1-1994, ISO 10012-1 part, or comparable standards) shall be required.

4.2.3 Assembly distributor. Assembly distributors must be listed on, or approved for listing on, the applicable qualified products list. The qualified connector manufacturer shall certify that the assembly distributor is approved for the distribution of the manufacturer's parts. The assembly distributor shall use only piece parts supplied by the qualified connector manufacturer. No testing other than visual examination is required of certified piece parts obtained from the qualified connector manufacturer, except when there is cause for rejection. All assemblies produced at the assembly distributor's plant shall be subjected to examination of product to assure that the assembly process conforms with that established at the qualified manufacturing plant. Quality control requirements, including Government inspection surveillance, shall be the same as required for the qualified connector manufacturer.

4.3 Qualification inspection. Qualification inspection shall be performed at a laboratory acceptable to the Government (see 6.3) on sample units produced with equipment and procedures normally used in production. Use of alternate materials, plating, and processes shall be identified for inclusion in the product test documentation (see 3.3.1).

4.4 Inspection conditions. Unless otherwise specified herein, all inspections shall be performed in accordance with the test conditions specified in the "GENERAL REQUIREMENTS" of MIL-STD-1344 and MIL-STD-202.

4.5 Sample size and inspection routine.

4.5.1 Connectors. The sample connectors submitted for qualification approval shall be produced with the contractor's regular production equipment and procedures; shall be selected from a production run after manufacturer's normal quality inspection has been performed; and shall not be subjected to any special preliminary screening test. Use of alternate materials, platings, and processes (see 3.3.1) shall be identified for inclusion in the product test documentation. A minimum of six completely assembled plugs and receptacles, with crimp termination's or nine completely assembled plugs and receptacles with solder termination's with the insert arrangement of the largest size connector for which qualification is desired shall be subjected to the examinations and tests in the sequence shown in table IX. If both classes E and S or SE connectors are being qualified at the same time, a minimum of three completely assembled plugs and receptacles of class E and a minimum of six completely assembled plugs and receptacles of class S or SE with the insert arrangement of the largest size connector shall be inspected. The connectors shall have their full complement of contacts. The minimum number of contact cavities or contacts shown in table X shall be inspected. Additional samples may be required to provide the contact cavities or contacts as specified in table X. Half of the connectors shall be wired with the maximum size wire (size 22) and the remainder shall be wired with the minimum size wire (size 26). The samples subjected to qualification testing shall be provided with counterpart connectors provided for this purpose shall be new, previously qualified connector or new connectors submitted for qualification testing. Suppliers not producing mating connectors shall submit substantiating certification data that tests were performed with qualified counterpart connectors. The samples shall be representative of the manufacturer's production. Connectors shall be wired with approximately 2 feet of M22759/11-22 wire conforming to MIL-W-22759/11 for maximum size wire and M22759/44-26, /45-26, /33-26, or /46-26 wire conforming to MIL-W-22759/44, /45, /33, 46 for minimum size wire. Termination of wires to crimp contacts shall be accomplished using a MIL-C-22520/2 crimping tool. Classes S and SE connectors may be wired with flexible printed wiring rated at the minimum test current in table V.

TABLE IX. Qualification and periodic inspection (connectors).

Inspection	Requirement paragraph	Method paragraph	Test samples								
			1	2	3	4	5	6 1/	7	8	9
Inspection of product	3.1, 3.3, 3.4, 3.7, 3.7.1 and 3.8	4.7.1	X	X	X	X	X	X	X	X	X
Magnetic permeability 2/	3.6.1	4.7.2			X	X					
Maintenance aging (crimp contact only)	3.6.2	4.7.3	X		X						
Contact insertion and removal force	3.6.3	4.7.4	X		X						
Mating and unmating force	3.6.4	4.7.5	X		X						
Contact retention	3.6.5	4.7.6	X	X	X	X					
Dielectric withstanding voltage 2/											
At sea level	3.6.6	4.7.7.1	X	X	X	X	X				
At altitude	3.6.6	4.7.7.2	X	X	X	X	X				
Insulation resistance 2/	3.6.7	4.7.8	X	X	X	X	X				
Contact resistance 1/	3.6.8	4.7.9	X	X	X	X					
Contact engagement and separation force 1/	3.6.9	4.7.10	X	X	X	X	X				
Mating and unmating force	3.6.4	4.7.5	X	X	X	X	X				
Thermal shock	3.6.10	4.7.11	X	X	X	X	X				
Humidity	3.6.11	4.7.12	X	X	X	X	X				
Dielectric withstanding voltage	3.6.6	4.7.7	X	X	X	X	X				
Insulation resistance	3.6.7	4.7.8	X	X	X	X	X				
Vibration	3.6.12	4.7.13	X	X	X	X	X				
Shock (specified pulse)	3.6.13	4.7.14	X	X	X	X	X				
Durability	3.6.14	4.7.15	X	X	X	X	X				
Mating and unmating force	3.6.4	4.7.5	X	X	X	X	X				
Contact engagement and separation force	3.6.9	4.7.10	X	X	X	X	X				
Altitude immersion (classes P and E)	3.6.22	4.7.23	X	X	X	X	X				
Salt spray (corrosion)	3.6.15	4.7.16	X	X	X	X	X				
Mating and unmating force	3.6.4	4.7.5	X	X	X	X	X				
Contact resistance	3.6.8	4.7.9	X	X	X	X	X				
Contact retention	3.6.5	4.7.6	X	X	X	X					
Oversize pin exclusion 1/	3.6.16	4.7.17	X	X	X	X					
Contact resistance 1/	3.6.8	4.7.9	X	X	X	X					
Probe damage 1/	3.6.17	4.7.18	X	X	X	X					
Contact engagement and separation force 1/	3.6.9	4.7.10	X	X	X	X					
Fluid immersion 2/	3.6.18	4.7.19	X	X	X	X	X				
Mating and unmating force 2/	3.6.4	4.7.5	X	X	X	X	X				
Crimp contact deformation 1/ 2/	3.6.19	4.7.20						X			
Contact pin strength 1/ 2/	3.6.20	4.7.21						X			
Crimp tensile strength 1/ 2/	3.6.21	4.7.22						X			
Inspection of product 1/ 2/	3.1, 3.3, 3.4, 3.7, 3.7.1 and 3.8	4.7.1	X	X	X	X	X	X			
Resistance to soldering heat 2/ 3/	3.6.23	4.7.24							X	X	X
Contact retention 2/ 3/	3.6.5	4.7.6							X	X	X
Solderability (printed wiring tails only)	3.6.24	4.7.25							X	X	X
Inspection of product 2/ 3/	3.1, 3.3, 3.4, 3.7, 3.7.1 and 3.8	4.7.1							X	X	X

1/ When using previously qualified crimp contacts, these tests are not required.
2/ Not applicable for retention of qualification.
3/ Connectors with printed wiring tails only.

4.5.2 Qualification of similar classes. Qualification of class E connectors shall also qualify classes G and P.

4.5.2.1 Contacts (crimp-removable only). A minimum quantity of contacts as listed in table X shall be inspected. Half of the contacts shall be wired with maximum size wire and the remainder shall be wired with minimum size wire as specified in 4.5.1. The samples shall be subjected to the qualification testing shown in table XI and shall be provided with connectors for those tests requiring connectors or mating connector assemblies. The connectors provided for this purpose shall be previously qualified connectors. Suppliers not manufacturing connectors shall make available substantiating certification data that tests were performed with qualified connectors. The samples shall be produced with equipment and procedures used in production.

TABLE X. Samples for qualification and periodic inspection.

Contacts (minimum)	
Qualification	Retention of qualification
Classes G, E, and P	All classes
300	100

TABLE XI. Qualification and periodic inspection (crimp removable contacts only).

Inspection	Requirement paragraph	Method paragraph
Inspection of product	3.1, 3.3, 3.4, 3.7, 3.7.1 and 3.8	4.7.1
Maintenance aging (crimp contact connectors only)	3.6.2	4.7.3
Contact insertion and removal force	3.6.3	4.7.4
Mating and unmating force	3.6.4	4.7.5
Contact resistance	3.6.8	4.7.9
Contact engagement and separation force	3.6.9	4.7.10
Thermal shock	3.6.10	4.7.11
Vibration	3.6.12	4.7.13
Shock (specified pulse)	3.6.13	4.7.14
Durability	3.6.14	4.7.15
Mating and unmating force	3.6.4	4.7.5
Contact engagement and separation force	3.6.9	4.7.10
Oversize pin exclusion	3.6.16	4.7.17
Probe damage	3.6.17	4.7.18
Contact engagement and separation force	3.6.9	4.7.10
Crimp contact deformation	3.6.19	4.7.20
Contact pin strength	3.6.20	4.7.21
Crimp tensile strength	3.6.21	4.7.22
Inspection of product	3.1, 3.3, 3.4, 3.7, 3.7.1 and 3.8	4.7.1

4.5.3 Failures. One or more failures shall be cause for refusal to grant qualification approval.

4.5.4 Verification of qualification. To retain qualification, the contractor shall verify in coordination with the qualifying activity the capability of manufacturing products which meet the performance requirements of this specification. Refer to the qualifying activity at any time that the inspection data indicates failure of the qualified product to meet the performance requirements of this specification.

4.6 Quality conformance inspection.

4.6.1 Inspection of products for delivery. Inspection of product for delivery shall consist of group A inspection.

4.6.1.1 Inspection lot. An inspection lot shall consist of all connectors or removable crimp contacts, as applicable, covered by a single specification sheet, produced under essentially the same conditions, and offered for inspection at one time.

4.6.1.2 Group A inspection. Group A inspection shall consist of the inspections specified in table XII for connectors and table XIII for contacts, in the order shown.

TABLE XII. Group A inspection (connectors).

Inspection	Requirement paragraph	Method paragraph
Inspection of product	3.1, 3.3, 3.4, 3.7, 3.7.1,and 3.8	4.7.1
Dielectric withstanding voltage (at sea level)	3.6.6	4.7.7.1
Insulation resistance	3.6.7	4.7.8

TABLE XIII. Group A inspection (contacts).

Inspection	Requirement paragraph	Method paragraph
Inspection of product	3.1, 3.3, 3.4, 3.7, 3.7.1 and 3.8	4.7.1
Contact engagement and separation force	3.6.9	4.7.10

4.6.1.2.1 Sampling plan. Statistical sampling and inspection for the samples submitted for group A inspection shall be on a lot by lot basis with sample sizes as listed in table XIV. Any occurrence of a failure shall be considered as failure of the lot.

TABLE XIV. Lot and sample size.

Lot size	Sample size
1 to 50	5
51 to 90	7
91 to 150	11
151 to 280	13
281 to 500	16
510 to 1200	19
1201 to 3200	23
3201 to 10000	29
10001 to	35

4.6.1.2.2 Rejected lots. If an inspection lot is rejected, the manufacturer may rework it to correct the defects, or screen out the defective units, and resubmit for reinspection. Resubmitted lots shall be inspected using tightened inspection (next higher lot size) and shall not thereafter be tendered for acceptance unless the former rejection or requirement of correction is disclosed. Such lots shall be separate from new lots and shall be clearly identified as reinspected lots.

4.6.1.2.3 Disposition of sample units. Sample units which have been subjected to group A inspection are available for use.

4.6.2 Periodic inspection. Periodic inspection shall consist of the inspections specified in table IX for connectors and table XI for contacts. Except where the results of these inspections show noncompliance with the applicable requirements (see 4.6.2.5), delivery of products which have passed group A inspection shall not be delayed pending the results of these periodic inspections.

4.6.2.1 Sampling plan (connectors). Sample connectors consisting of two mated pairs of each of the size of the types and termination and each of the sizes of the types containing contacts for which periodic inspection is desired shall be selected every 24 months. Upon passing this inspection two consecutive times, the supplier may select sample connectors every 36 months. If production of a particular PIN is not current, the periodic inspection tests shall take place at the time production is resumed. The testing shall revert to the original schedule which is applied to a newly qualified product. If periodic inspection on both classes G and S is desired, one completely assembled plug and receptacle of each class shall be subjected to the examinations and tests in lieu of two of a single class.

4.6.2.2 Sampling plan (contacts). The minimum quantity of contacts listed in table X shall be inspected every 24 months. Upon passing this inspection two consecutive times, the supplier may select sample connectors every 36 months. If production of a particular PIN is not current, the periodic inspection tests shall take place at the time production is resumed. The testing shall revert to the original schedule which is applied to a newly qualified product.

4.6.2.3 Failures. If any sample units fail to pass periodic inspection, the entire sample shall be considered to have failed.

4.6.2.4 Disposition of sample units. Sample units which have been subjected to the periodic inspection shall not be delivered on a contract or purchase order.

4.6.2.5 Noncompliance. If a sample fails to pass periodic inspection the manufacturer shall take corrective action on the materials or processes, or both, as warranted, and on all units for product which can be corrected and which were, manufactured under essentially the same condition with essentially the same materials, processes, etc., and which are considered subject to the same failures. Normal inspection shall be discontinued until corrective action, acceptable to the Government, has been taken. After the corrective action has been taken, periodic inspection shall be repeated on new samples. Group A inspection may be reinstituted; however, final acceptance shall be withheld until the periodic inspection has shown that the corrective action was successful, In the event of a failure after reinspection, information concerning the failure and corrective action taken shall be furnished to the qualifying activity.

4.7 Methods of inspection.

4.7.1 Test methods. The following identified tests and test methods assure connector and contact integrity within typical operating conditions and applications. Alternate commercial industry standard test methods are allowed however when an alternate method is used, the alternate method must be coordinated with the qualifying activity prior to performance of the test. The test methods described herein are proven methods and shall be the referee method in cases of dispute.

4.7.1.1 Inspection of product. Connectors and associated hardware shall be examined to verify that the design, construction, physical dimensions, marking, and workmanship are in accordance with the applicable requirements (see 3.1, 3.3, 3.4, 3.7, 3.7.1 and 3.8).

4.7.1.2 Final inspection of product. Final examination of crimp contacts shall include a thorough examination to insure that identification markings are legible, the contact is free from mechanical defects, there are no cracks around the crimp area, and the contacts meet the physical requirements specified herein. Examination shall be made with a device having magnification power of approximately 3X.

4.7.2 Magnetic permeability (see 3.6.1). Permeability shall be measure on classes G, E, and P connectors with an instrument conforming to ASTM-A342. The connectors may be wired or unwired but shall not be carrying current.

4.7.3 Maintenance aging (crimp contact connectors only) (see 3.6.2). Maintenance aging shall be conducted in accordance with method 2002 of MIL-STD-1344, the following details shall apply:

a. M81969/01-4 tool shall be used.

b. Installation requirements (see 4.5.1.1).

c. Initial requirements; All contacts shall be removed and reinserted once. Connectors shall be mated and unmated once and force values recorded as specified in 4.7.5.

d. Following the test, contact insertion and removal (see 4.7.4) and mating and unmating force (see 4.7.5) shall be performed.

4.7.4 Contact insertion and removal force (see 3.6.3). Contact insertion and removal force shall be conducted in accordance with method 2012 of MIL-STD-1344, the following details shall apply:

a. Wire (see 4.5.1.1).

b. Forces: As specified in 3.6.3.

4.7.5 Mating and unmating force (see 3.6.4). Mating and unmating forces shall be measured in accordance with method 2013 of MIL-STD-1344, the following details shall apply:

a. Special mounting means: Normal mounting.

b. Wire (see 4.5.1.1).

c. Applicable hardware: Complete connector assembly.

d. Force or torque requirements (see 3.6.4).

e. Rate of mating and unmating: Maximum of 10 seconds per operation.

f. Mating parameters: When coupling pins lock.

4.7.6 Contact retention (see 3.6.5). Contact retention shall be measured in accordance with method 2007 of MIL-STD-1344.

a. Number of samples (see 4.2.1).

b. Removal of wires: Not applicable.

c. Applied axial force: 10 pounds (4.53 Kg) minimum.

d. Maximum displacement: .012 inch (0.30 mm).

e. Axial direction: Force applied to mating end of contacts.

4.7.7 Dielectric withstanding voltage (see 3.6.6).

4.7.7.1 Sea level. Unmated connectors shall be tested in accordance with method 3001 of MIL-STD-1344. The applicable test voltage in table XV shall be applied between all adjacent contacts and between the center hardware and each adjacent contact. For group A inspection, voltage may be applied for a minimum of 10 seconds.

TABLE XV. Test voltage (rms 60 Hz ac volts). 1/

Altitude feet (km)	Moisture conditioned (see 4.7.12) samples	All other samples
Sea level	500	1200
70,000 (21.34)		375

1/ These are not working voltages.

4.7.7.2 Altitude (see 3.6.22). Unmated connectors shall be tested as specified in 4.7.7.1, with altitude pressure of 35.5 torr, at the simulated altitude of 70,000 feet (21,336 meters). Voltage shall be applied for 5 seconds. All other requirements are stated in 4.7.7.1.

4.7.8 Insulation resistance (see 3.6.7). Connectors shall be tested in accordance with method 3003 of MIL-STD-1344. The points for resistance measurements shall be:

a. Between 50 percent of adjacent contacts, but not less than four pairs.

b. Between 50 percent of adjacent contacts and the center hardware, but not less than four pairs.

c. The contacts selected shall be those having the closest spacing between measuring points.

4.7.9 Contact resistance (see 3.6.8). Contact resistance shall be measured in accordance with method 3004 of MIL-STD-1344, on each mated pair.

4.7.10 Contact engagement and separation force (see 3.6.9). Sockets shall be mounted in a suitable position or fixture for applying gradually increasing loads for the engagement and separation of test pins from the sockets. Maximum and minimum test pins shall be in accordance with figure 3. Insertion of test pins shall be to a depth of .140 inch (3.56 mm) minimum when measured from the front of the socket contact. The test pin shall not bottom in the socket. This test shall be performed in the following sequence:

a. Insert and separate a maximum diameter pin in and from each socket contact, then insert and remove a minimum diameter pin in the same sockets. During separation of the minimum diameter test pin, the minimum separation force shall conform to 3.6.9.

b. Insert and separate a maximum diameter pin in and from each socket contact three times. During the third cycle, the engagement shall conform to 3.6.9.

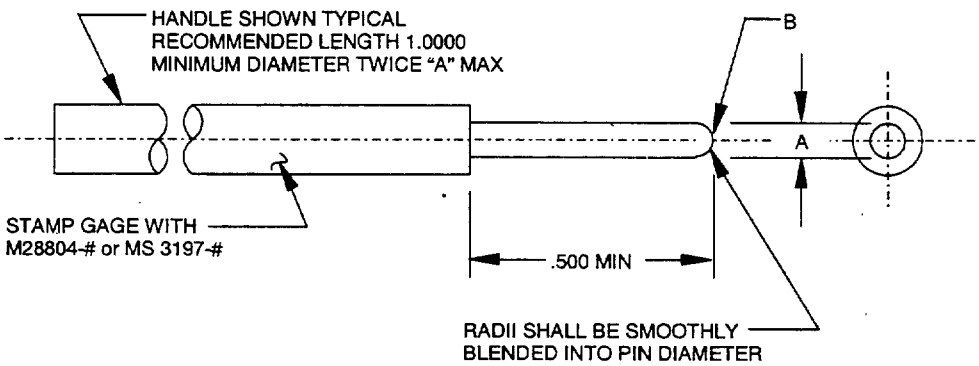

Contact size	A (dash number)		B
	Minimum diameter (-22X1)	Maximum diameter (-22Y1)	Max flat
22	0.0295 (0.75) +.0001 (0.0025 mm) -.0000	0.0305 (0.77) +.0000 -.0001 (0.0025 mm)	.007 (0.18)

NOTES:
1. Dimensions are in inches.
2. Metric equivalents are given for general information only.
3. Material: Gauge pin for contact size 22, tool steel or tungsten carbide.
4. Finish: 6 to 10 microinches root mean square determined in accordance with ANSI B46.1.
5. No plating.
6. These gauges are intended for use with electric connector socket contacts referenced in this document.

FIGURE 3. Test pin.

4.7.11 Thermal shock (see 3.6.10). Unmated connectors shall be tested in accordance with method 1003 of MIL-STD-1344. Test condition letter shall be A1 except the minimum temperature shall be -55°C, +0°C, -3°C. Following the last cycle, the connectors shall be returned to room temperature for inspection and further testing.

USA Information Systems, Inc.
(757)491-7525 / (800)872-8830
www.usainfo.com

4.7.12 Humidity (see 3.6.11). Fully wired connectors shall be subjected to a humidity test in accordance with method 1002 of MIL-STD-1344, type II, the following exceptions and details shall apply:

a. Omit step 7.

b. Upon completion of step 6 of the final cycle, connectors shall be removed from the chamber and surface moisture removed from the insulators.

c. Immediately following removal of surface moisture, dielectric withstanding voltage (see 4.7.7) and insulation resistance (see 4.7.8) shall be measured.

d. After the 24-hour conditioning period, the insulation resistance (see 4.7.8) shall be measured again.

4.7.13 Vibration (see 3.6.12). Mated connectors shall be tested in accordance with method 2005 of MIL-STD-1344, test condition IV. All contacts shall be wired in series. For size 26 wire, a strain relief clamp may be mounted directly on the connector.

4.7.14 Shock (specified pulse) (see 3.6.13). Mated connectors shall be subjected to method 2004 of MIL-STD-1344, test condition G. One shock shall be applied in each direction of the three major axes of the connectors. Receptacles shall be mounted similar to the mounting of 4.7.13. Plugs shall be engaged with the receptacles and shall not be held by any locking means. All contacts shall be wired in series with a minimum of 100 milliamperes of current allowed to flow and the wire bundles or cables shall be clamped to structures that move with the connectors. A minimum of 8 inches of wire or cable shall be unsupported behind the rear of the receptacle and 4 1/2 inches (114.30 mm) of wire or cable shall be unsupported behind the rear of the plug. A suitable instrument shall be used to indicate any discontinuity or interruption of current flow.

4.7.15 Durability (see 3.6.14). Connectors shall be tested in accordance with method 2016 of MIL-STD-1344. the following details shall apply:

a. Counterpart connectors shall be mated and unmated 500 times at a rate of 200 ±100 cycles per hour in a manner to simulate actual service.

b. After 500 cycles, the mated connectors shall be subjected to salt spray (see 4.7.16).

4.7.16 Salt spray (corrosion) (see 3.6.15). Mated connectors shall be subjected to salt spray in accordance with method 1001 or MIL-STD-1344, the following details shall apply:

a. Test condition B.

b. Measuring after test: Contact resistance (see 4.7.9) and mating and unmating force (see 4.7.5) shall be measured.

4.7.17 Oversize pin exclusion (see 3.6.16). A hardened steel oversize pin, as specified in 3.6.16, shall be placed in a position centered and parallel to the axis of the socket contact. A 12 ounce (3.34 N) axial force shall then be applied tending to force the test pin into the socket contact. After completion of the test, contact resistance (see 4.7.9) shall be measured on 20 percent or a minimum number of four socket contacts in each connector.

4.7.18 Probe damage (see 3.6.17). Socket contacts shall be tested in accordance with method 2006 of MIL-STD-1344, the following details shall apply:

a. Number and size of samples: 20 percent of the contacts or a minimum of four contacts.

b. Probe damage tool shall be inserted into the contact to a depth of .160 ±.020 inch (4.06 ± 0.51 mm).

c. The diameter of the handle .190 inch (4.82 mm) is not applicable.

d. The tolerance on the inch-pounds shall be 10 percent in lieu of the values specified in MIL-STD-1344.

e. After testing, contact engagement and separation force shall be measured (see 3.6.9).

4.17.19 Fluid immersion (see 3.6.18). Unmated connectors shall be immersed fully in the fluids specified below for the required periods. At least one connector shall be immersed in each fluid. After removal from the fluid, each connector shall remain for 1 hour in free air at room conditions. Subsequent testing shall be performed on connectors mated with the same mating connectors used previously in the test. The connectors shall be mated by hand. Following mating, connectors shall be cleaned in a suitable solvent to remove hydraulic fluid and lubrication oil.

a. Hydraulic fluid conforming to MIL-PRF-87257 for 20 hours.

b. Lubricating oil conforming to MIL-L-23699 for 20 hours.

4.7.20 Crimp contact deformation (see 3.6.19). Contacts shall be tested in accordance with method 2001 of MIL-STD-1344. The test shall be performed on at least 40 contact pairs, selected so that 20 pairs having the maximum wire size and 20 pairs having the minimum wire size are tested.

4.7.21 Contact pin strength (see 3.6.20). Unless otherwise specified (see 3.1), removable contacts shall be mounted in a suitable fixture and a load applied to the pin as shown on figure 4. The rate of travel of the testing machine shall not exceed 1 inch (25.40 mm) per minute, and the load shall be maintained for 1 minute. The permanent set shall be the difference between the initial and final position of the point of load application after load removal. The test shall be performed on at least 40 contacts.

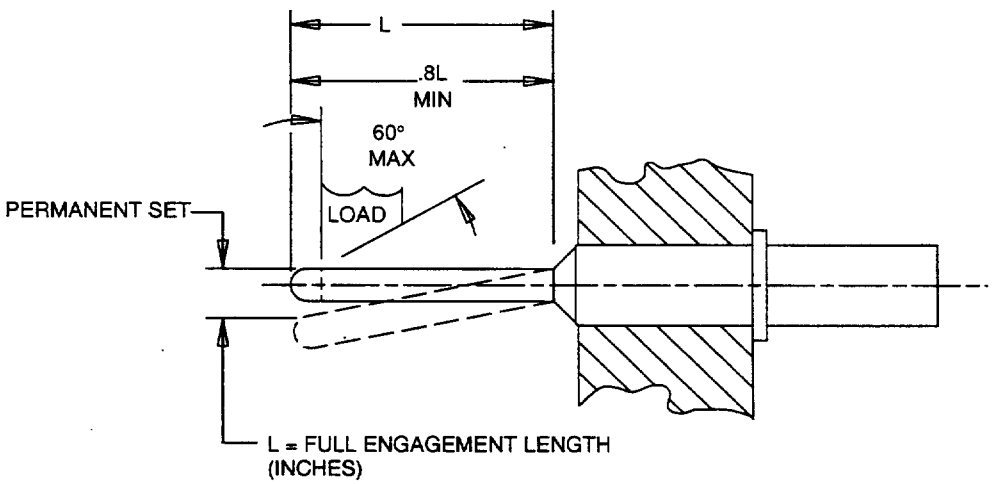

FIGURE 4. Contact pin strength.

4.7.22 Crimp tensile strength (see 3.6.21). Crimp contacts shall be tested in accordance with method 2003 of MIL-STD-1344. Contacts shall be crimped using a tool specified in MIL-C-22520/2. The test shall be performed on a least 40 contact pairs. These shall be selected so that 20 pairs have the maximum wire size and 20 pairs have the minimum wire size (see 4.5.1).

4.7.23 Altitude immersion (classes P and E) (see 3.6.22). Mated connectors shall be tested in accordance with method 1004 or MIL-STD-1344, the following details shall apply:

a. All wire ends shall be located within the chamber and exposed to the chamber atmosphere but not submerged or sealed.

b. At the end of the third cycle, while the connectors are still submerged in the solution, the insulation resistance shall be measured as specified in 4.7.8 and the dielectric withstanding voltage test shall be performed as specified in 4.7.7.

4.7.24 Resistance to soldering heat (see 3.6.23). All connectors with solder termination's shall be tested in accordance with EIA-364-56. The connectors shall be tested in accordance with procedure 3 or 4 as specified (see 3.1). If no procedure is specified, connectors shall be tested in accordance with procedure 3.

4.7.25 Solderability (printed wiring tails only) (see 3.6.24). Solderable, non-removable printed wiring tails shall be tested in accordance with method 208 of MIL-STD-202, (type R or RMA flux may be used).

5. PACKAGING

5.1 Packaging. For acquisition purposes, the packaging requirements shall be as specified in the contract or order (see 6.2). When actual packaging of material is to be performed by DoD personnel, these personnel need to contact the responsible packaging activity to ascertain requisite packaging requirements. Packaging requirements are maintained by the Inventory Control Point's packaging activity within the Military Department or Defense Agency, or within the Military Department's System Command. Packaging data retrieval is available from the managing Military Department's or Defense Agency's automated packaging files, CD-ROM products, or by contracting the responsible packaging activity.

6. NOTES

(This section contains information of a general or explanatory nature which may be helpful, but is not mandatory.)

6.1 Intended use. All connectors and contacts covered by this specification are intended for use in airborne, ground support, and shipboard electrical and electronic equipment where presence of residual magnetism must be held to very low levels to avoid interference with nearby sensitive instrumentation. The connectors and contacts covered by this specification are military unique because they must be able to operate at high altitude (70,000 feet (21.34 km) maximum), operate at a temperature range of -55° C to +125°C, withstand 48 hours of salt spray (without exposure of base metals, pitting and porosity of finishes), and 100 g's of shock with no electrical discontinuities. Commercial electronic connectors and contacts are not designed to withstand such extreme and sudden environmental conditions and would experience catastrophic failure.

a. Class G connectors are intended for use in non-environment resisting applications where the operating temperature range of -55°C to +125°C is experienced. Crimp contact connectors have the additional advantage of possessing rear removable crimp type contacts.

b. Class P connectors are intended for environmental resisting applications where sealing around wires is accomplished by potting.

c. Class E connectors are intended for environmental resisting applications. Provisions are made for sealing around wire at rear of connectors. Crimp contact connectors have the advantage of possessing rear release crimp type contacts.

d. Class S connectors are supplied with nonremovable solder post termination's. This connector is intended for use with flexible printed circuits conforming to the pin pattern and thread inserts are provided for securing printed circuit to rear of connector.

e. Class SE connectors are supplied with nonremovable solder post termination and interfacial seal. They are for use with the same circuitry as the class S connectors.

f. All classes of connectors are for use in applications wherein presence of residual magnetism must be held to very low levels to avoid interference with nearby sensitive instrumentation.

6.2 Acquisition requirements. Acquisition documents should specify the following:

a. Title, number, and date of the specification.

b. Title, number, and date of the applicable specification sheet, and the complete PIN (see 1.2.2 and 3.1).

c. Certificate of compliance covering materials, when required.

d. Issue of DODISS to be cited in the solicitation, and if required, the specific issue of individual documents referenced (see 2.1 and 2.2).

e. Packaging requirements (see 5.1).

6.3 Qualification. With respect to products requiring qualification, awards will be made only for products which are, at the time of award of contract, qualified for inclusion in Qualified Products List QPL No. 28804 whether or not such products have actually been so listed by that date. The attention of the contractors is called to these requirements, and manufacturers are urged to arrange to have the products that they propose to offer to the Federal Government tested for qualification in order that they may be eligible to be awarded contracts or orders for the products covered by this specification. The activity responsible for the Qualified Products List is Space and Naval Warfare Command, (SPAWAR 003-121), Department of the Navy, Washington, D.C. 20363. Information pertaining to qualification of products may be obtained from the Defense Supply Center Columbus, P.O. Box 3990, ATTN: DSCC-VQ, Columbus, Ohio 43216-5001. Application procedures should conform to the "Provisions Governing Qualification" (see 6.3.1).

6.3.1 Provisions governing qualification. Copies of "Provisions Governing Qualification" may be obtained upon application to Standardization Document Order Desk, Building 4D, 700 Robbins Avenue, Philadelphia, PA 19111-5094.

6.4 Copyright notice. All information disclosed in this specification and related specification sheets which is or may be copyrighted by Hughes Aircraft Company is reproduced herein with the express permission of the copyright owner.

6.5 Rights in technical data. The Government has a royalty free license in and to the design and manufacturing details from the Hughes Aircraft Company for the benefit of manufacturers of the items disclosed and described herein either for the Government or for use in equipment delivered to the Government.

6.6 Environmentally preferable material. Environmentally preferable materials should be used to the maximum extent possible that the material meets or exceeds the operational and maintenance requirements, and promotes economically advantageous life cycle costs. Table XVI lists the Environmental Protection Agency (EPA) top seventeen hazardous materials targeted for major usage reduction. If any of these hazardous materials are required, it is recommended that it be used only when other materials cannot meet performance requirements.

TABLE XVI. EPA top seventeen hazardous materials.

Benzine	Dichloromethane	Tetrachloroethylene
Cadmium and compounds	Lead and compounds	Touene
Carbon Tetrachloride	Mercury and compounds	1,1,1 - Trichloroethane
Chloroform	Methyl Ethyl compounds	Trichloroethylene
Chromium and compounds	Methyl Isobutyl Ketone	Xylenes
Cyanide and compounds	Nickel and compounds	

6.7 Supersession data. MIL-W-81381 wire is no longer the wire of choice for aerospace applications. For existing applications the suggested supersession data is as shown in table XVII.

TABLE XVII. Supersession data

Original wire MIL-W-81381	Replacement wire MIL-W-22759
M81381/7	M22759/44
M81381/8	M22759/45
M81381/9	M22759/33
M81381/10	M22759/46

6.7 Subject term (keyword listing).

Contacts
Crimp
Current
Dielectric
Finish
Heat
Humidity
Inspection
Insulation displacement
Lead
Magnetic permeability
Materials
Mating force
Nickel
Qualification
Sampling
Socket
Solderability
Tin

6.8 Changes from previous issue. Marginal notations are not used in this revision to identify changes with respect to the previous issue due to the extensiveness of the changes.

CONCLUDING MATERIAL

Custodians:
Army - CR
Navy - EC
Air Force - 85

Review activities:
Army - AM, AR, AT, MI
Navy - AS, MC
Air Force - 99

Preparing activity:
DLA - CC

(Project: 5935-4131)

STANDARDIZATION DOCUMENT IMPROVEMENT PROPOSAL

INSTRUCTIONS

1. The preparing activity must complete blocks 1, 2, 3, and 8. In block 1, both the document number and revision letter should be given.

2. The submitter of this form must complete blocks 4, 5, 6, and 7.

3. The preparing activity must provide a reply within 30 days from receipt of the form.

NOTE: This form may not be used to request copies of documents, nor to request waivers, or clarification of requirements on current contracts. Comments submitted on this form do not constitute or imply authorization to waive any portion of the referenced document(s) or to amend contractual requirements.

I RECOMMEND A CHANGE:	1. DOCUMENT NUMBER MIL-DTL-28804D	2. DOCUMENT DATE (YYMMDD) 980910

3. DOCUMENT TITLE CONNECTORS, PLUG AND RECEPTACLE, ELECTRIC, RECTANGULAR, HIGH DENSITY, POLARIZATION CENTER JACKSCREW GENERAL SPECIFICATION FOR

4. **NATURE OF CHANGE (Identify paragraph number and include proposed rewrite, if possible. Attach extra sheets as needed.)**

5. REASON FOR RECOMMENDATION

6. SUBMITTER

a. NAME (Last, First, Middle initial)	b. ORGANIZATION	
c. ADDRESS (Include Zip Code)	d. TELEPHONE (Include Area Code) (1) Commercial (2) DSN (If applicable)	7. DATE SUBMITTED (YYMMDD)

8. PREPARING ACTIVITY

a. NAME Defense Supply Center Columbus	b. TELEPHONE (Include Area Code) (1) Commercial 614-692-0573 (2) DSN 850-0573 (3) Fax 614-692-6940
c. ADDRESS (Include Zip Code) DSCC-VAI 3990 East Broad Street Columbus, Ohio 43216-5000	**IF YOU DO NOT RECEIVE A REPLY WITHIN 45 DAYS, CONTACT:** Defense Quality and Standardization Office 5203 Leesburg Pike, Suite 1403, Falls Church, VA 22041-3466 Telephone (703) 756-2340 DSN 289-2340